ORDER NO. AVD-8005-524

Service Manual

Vol. 1

Circuit Description

Colour Video Cameras

WV-3200N/WV-3200E

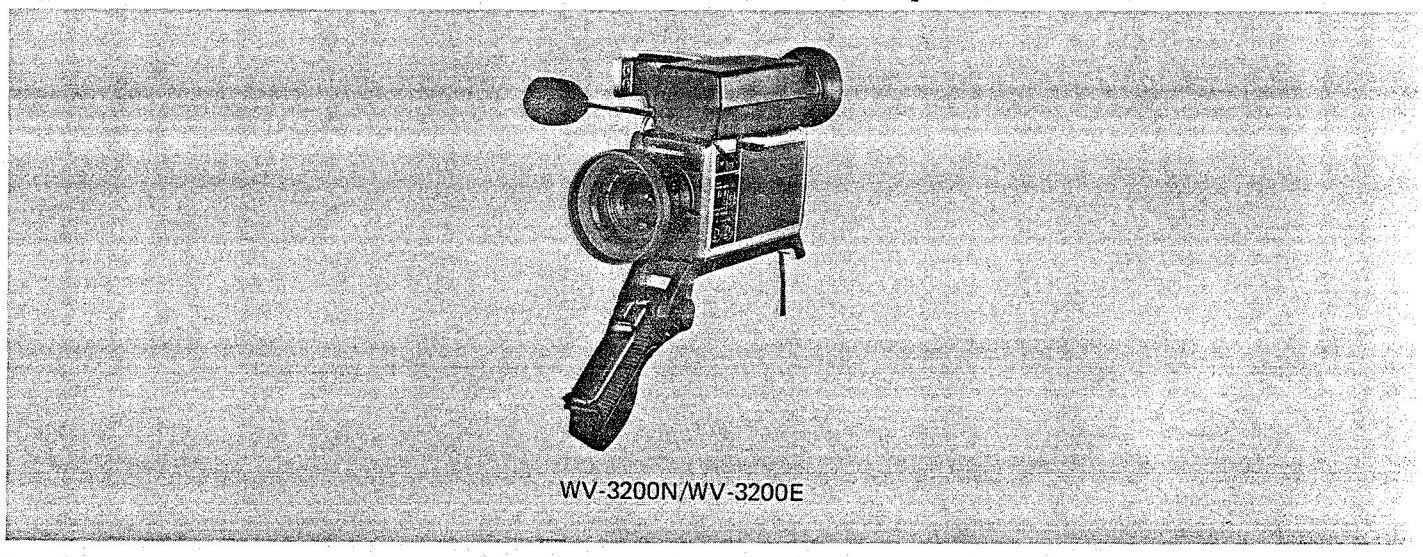

WV-3200N/WV-3200E

CONTENTS

OUTLINE OF WV-3200N/WV-3200E

1. Process Circuit Board (YWV3201EZK03) 1
2. Deflection Circuit Board (YWV3201EZK02) 1
3. Electronic Viewfinder Circuit Boards (YWV3206EZK08, 09, 10) 2

CIRCUIT DESCRIPTION OF CAMERA

1. Principle of Single Carrier Frequency Multiplexing System Using a Single Tube 3
2. Preamplifier Circuit Board (YWV3201EZK01) 8
3. Deflection Circuit Board (YWV3201EZK02) 10
4. Process Circuit Board (YWV3201EZK03) 23
5. Electronic Viewfinder Circuit Boards (YWV3206EZK08. 09. 10) 50

National/Panasonic

Matsushita Electric Trading Co., Ltd.
P.O. Box 288, Central Osaka Japan

OUTLINE OF WV-3200N / WV-3200E

Color camera WV-3200N/E consists of Camera head with electronic viewfinder, and zoom lens.
The camera head contains three built-in printed circuit boards; Preamplifier circuit board (YWV3201EZK01), Deflection circuit board (YWV3201EZK02) and Process circuit board (YWV3201EZK03). In the electronic viewfinder, Viewfinder circuit boards (YWV3206EZK08, 09, 10) are incorporated.
The optional Power supply WV-PS01N/E contains two built-in circuit boards, which are +12V circuit board (YWV3203EZK11), and Connector circuit board (YWV3203EZK12).

1. Process Circuit Board (YWV3201EZK03)

The incoming light through the zoom lens goes into the vidicon (Cosvicon) with a built-in stripe filter. Here, in the vidicon, both the red and blue light are converted into video signal at 3.58MHz. The converted signal from the vidicon is amplified by the preamplifier circuit and then supplied to the process circuit as a pre-video signal. The pre-video signal is demodulated by the Red/blue carrier signal separation circuit and Red/blue detection circuit after passing through AGC circuit. At this time, shading correction and tracking correction are made to correct the inequality of the signal level. The R and B signals are supplied to the R-Y_L and B-Y_L modulator circuit respectively. On the other hand, the modulated pre-video signal from preamplifier is fed into luminance signal processing circuit via AGC/Y signal generator to obtain a luminance signals, Y_L, Y_H, Y(edge) signals. The Y_L signal is supplied to the R-Y_L and B-Y_L modulator circuit and white supress (Y(sup)) circuits, Y_H signal to the H aperture correction and video signal circuit for PAL, Y(edge) signal to the V edge signal circuit. The modulated R-Y_L and B-Y_L signals are mixed to become a chrominance signal. By mixing the aperture corrected Y_H signal, V edge signal, chrominance signal, burst, sync and BL signals, a PAL composite signal can be generated for application to the viewfinder circuit and output connector for the VCR. The pulse generator circuit generates SC(B-Y_L), SC(R-Y_L), PRE BL, clamp pulse, horizontal scanning start (Hs) pulse, burst flag pulse (B.F.P.), vertical scanning start (Vs) pulse, composite BL signal and sync signal, and BL/BFP mixed pulse for application to the Process circuit board and Deflection circuit board.

2. Deflection Circuit Board (YWV3201EZK02)

The horizontal scanning start (Hs) pulse supplied from the Process circuit board is fed to the horizontal (H) deflection and H linearity correction to generate H deflection sawtooth current. Similarly, the vertical scanning start (Vs) pulse is supplied to the vertical (V) deflection circuit to generate V deflection sawtooth current. The H and V deflection sawtooth current is supplied to the H and V deflection coils within the coil assemlby for scanning the electron beam of the vidicon. The Hs pulse from the pulse generator circuit is converted into a 1/2Hs frequency and then supplied to the high voltage circuit to generate high voltage with the DC to DC convertor for application to each grid of vidicon. The Hs signal is supplied to sawtooth and parabola generator circuit and then converted into the H sawtooth/H parabola signals for application to the dark shading correction circuit. These signals become correction signals for correcting inequality of vidicon's dark shading levels.
In addition to the aforementioned H sawtooth /H parabola signals, the V sawtooth/V parabola signals from the sawtooth/parabola generator are supplied to the dynamic focus circuit to generate a dynamic focus signal necessary to equally focus electron beams on the entire scanning area of the vidicon. The Hs signal and the V sawtooth signal from the V deflection circuit are mixed to generate a blanking signal. The target voltage control circuit is intended to automatically control the dark current level of the vidicon (which changes with temperature) by varying the target voltage.
The VCR remote control circuit generates either a high or low level with operation of the VCR start/stop switch for turning the VCR ON/OFF, and at the same time causes the tally lamp on the viewfinder and the tally lamp on the rear panel of the camera to light.
The H deflection and V deflection signals are supplied to the vidicon protection circuit to protect the photoconductive layer from burn-out in the event of a deflection circuit failure by stopping the generation of high voltages supplied to vidicon grids and thus cutting off the electron beam.

The +9V regulator circuit generates +9V DC by regulating +12V power supplied from the VCR. The +9V is used as a power for all camera head circuits and viewfinder circuit.

The +3V regulator circuit regulates +9V power supplied from the +9V regulator circuit to generate +3VDC. The +3V power is used as heater voltage for vidicon and CRT, AIC motor and each circuit for the camera head.

3. Electronic Viewfinder Circuit Boards (YWV3206EZK08, 09, 10)

The viewfinder (V/F) video signal supplied from the Process circuit board is amplified within the Viewfinder circuit board and then supplied to the CRT. The sync signal is separated from the video signal by sync separation circuit and then supplied to H and V deflection circuits respectively. The H and V deflection sawtooth current generated in deflection circuit are fed into the respective deflection coils for scanning on the CRT. The H pulse obtained at the H deflection circuit is supplied to the high voltage circuit and rectified. The rectified DC voltages are supplied to the anode of the CRT and each grid. The V sawtooth signal from the V deflection circuit and the H pulse from the high voltage circuit are mixed to provide a composite blanking pulse. This pulse is fed into the cathode (K) of the CRT for erasing the blanking line on the CRT screen.

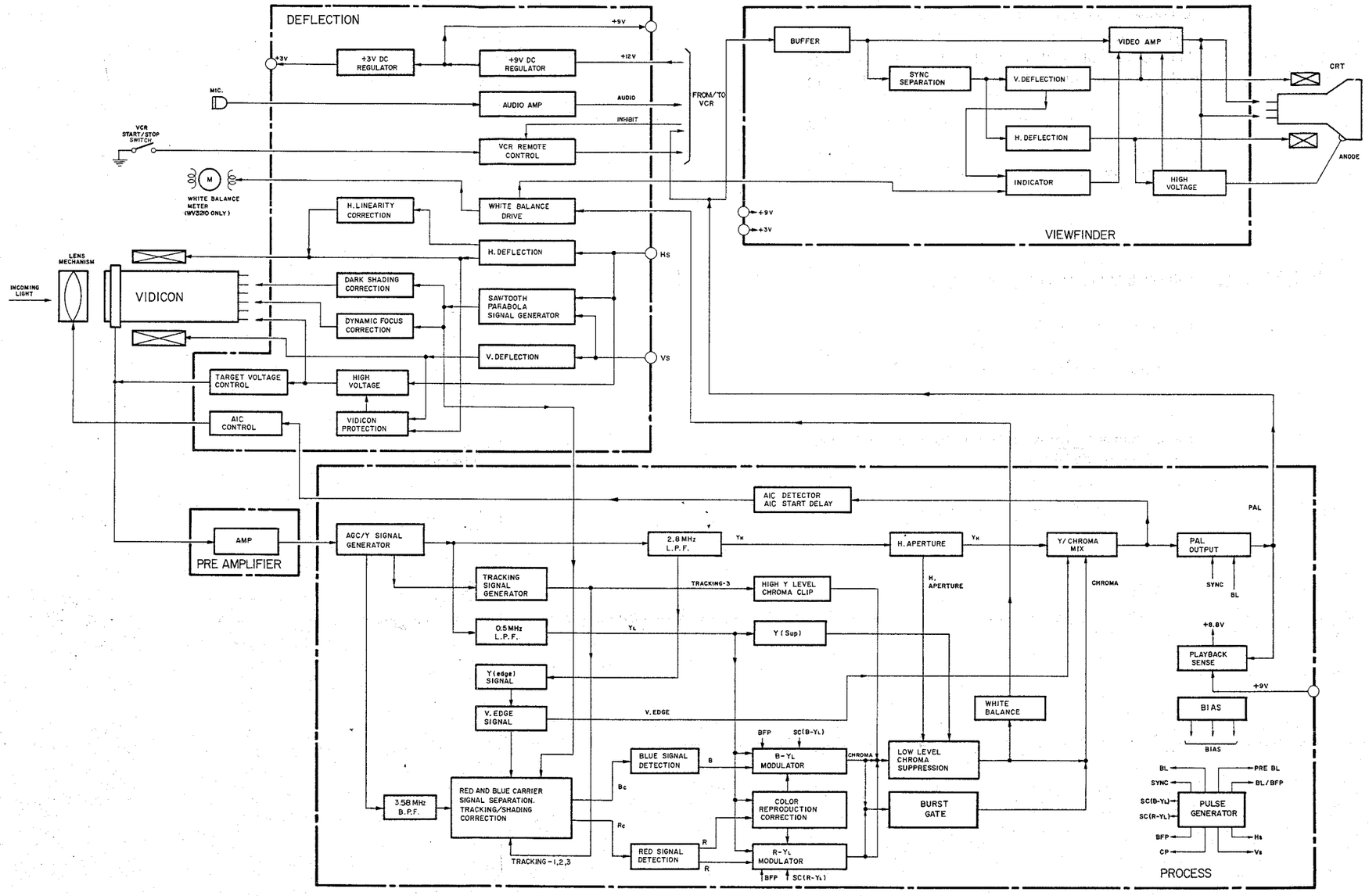

CIRCUIT DESCRIPTION OF CAMERA

1. Principle of Single Carrier Frequency Multiplexing System using a Single Tube.

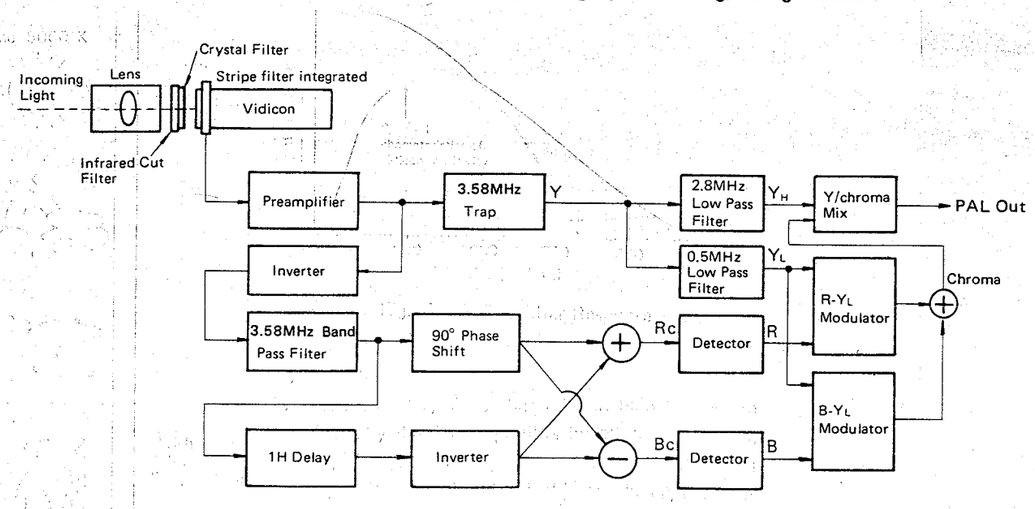

Fig. 2 Principle of Single Carrier Frequency Multiplexing System using a Single Tube

The incoming light to the camera which passes through the lens, the optical mechanism in which the color temperature covnersion filter is installed, the infrared(IR) cut filter and the crystal filter reaches the surface of the stripe filter integrated in a 2/3" vidicon (Cosvicon S4094P).

Color Temperature Conversion Filter

Generally, the human eye is sensitive to electromagnetic waves from 380mμ (mμ=nm) to 780mμ in wavelength (the visible region). In addition, the human eye also discerns the wavelength difference as a color difference. The human eye responds to the light between 400mμ to 500mμ wavelength as predominantly blue information, the light between 500mμ to 600mμ as green information, and the light between 600mμ to 700mμ as red information. The entire light in the "visible" range of wavelength from 380mμ to 780mμ is "seen" as different amount of white light.

When a carbon is burned, it emits light of a different quality depending on how hot it is. Various natural light can be expressed in terms of a color temperature which may be refered to a light emitted from the burning carbon used as a standard. A light source of 3200°K (K=Kelvin: −273°C corresponds to 0°K an absolute temperature) color temperature, which is used in studios, implies that its quality (color) is the same as that emitted from the carbon burning at 3200°K (2927°C). The relationship between the color temperature of light sources used for illumination and weather conditions are shown in Fig. 5. The color temperature goes up as the weather turns rainy from clear. This may be related to the burning carbon (charcoal) as follows. When the charcoal is heated and begins to glow (at low temperature), it emits a reddish light. But when it is so-called white hot (at high temperature), a bluish light is emitted. In other words, the light at a low color temperature is considered reddish and at high color temperature is considered bluish.

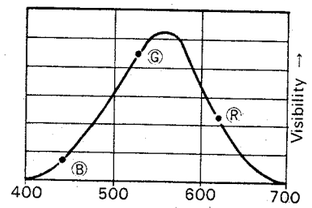

Fig. 3 Standard Luminosity Curve

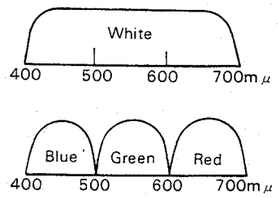

Fig. 4 The Visible Spectrum

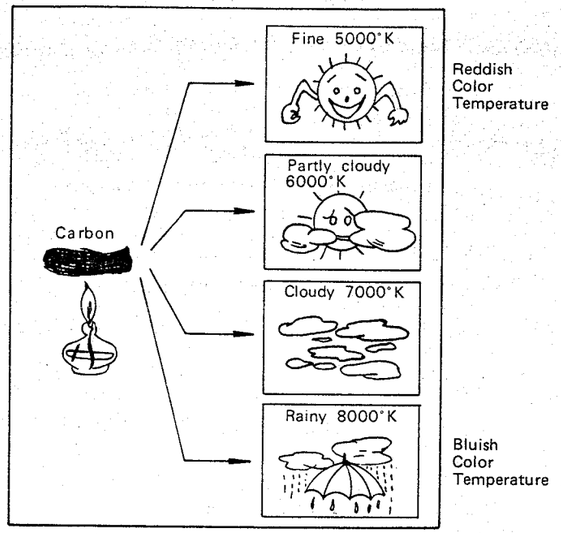

Fig. 5 Color Temperature and Weather Conditions

When a color camera is pointed at an object illuminated by a light of low color temperature, it reproduces a reddish picture.
When a color camera is pointed at an object illuminated by a light of high color temperature, it reproduces a bluish picture. WV-3200N/WV-3200E cameras have the indoor-outdoor selection switch which corrects for the color temperature of the light. When the switch is set to the outdoor position, the 5500°K COLOR TEMPERATURE CONVERSION FILTER is inserted into the light path to convert the color temperature from 5500°K to 3200°K. In addition to the indoor-outdoor selection switch utilizing the color temperature conversion filter, this camera is designed so that the level of red and blue signals can be changed independently to meet the color temperature of the light source in order to ensure proper color reproduction.

Infrared Cut Filter

As shown in Fig. 6, the vidicon has some sensitivity in the infrared region beyond the visible range. The infrared(IR) cut filter cuts off the infrared light rays which the human eye does not see as light. If the PAL signal is made by using the video signal corresponding to the infrared rays which the human eye can not normally see, the colors of pictures on the monitor and that seen with the naked eye would differ substantially.

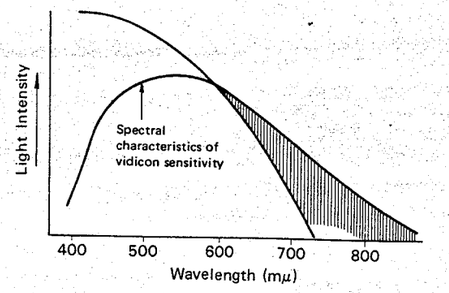

Fig. 6 IR Cut Filter Response

Crystal Filter

As described later, since the red and blue images are modulated by the fine stripe filter built into the vidicon, false signals could develop due to interference between the stripe filter and fine detail objects. The crystal filter is an optical low pass filter which prevents the occurrence of such false signals by blocking the high frequency components of images.

Vidicon

Different from that of the black-and white camera, the WV-3200N/WV-3200E vidicon has a built-in stripe filter, a metallic stripe called the optical black(OB) located on the face-plate. The PAL signal's black level is set in reference to the signal from the optical black.

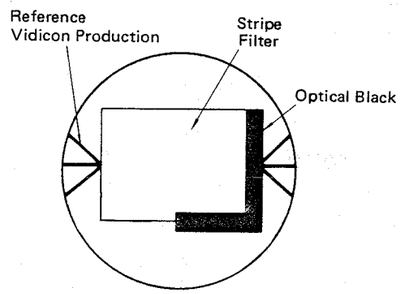

Fig. 7 Front View of S4094P Vidicon

As shown in Fig. 10Ⓑ, the stripe filter integrated into the vidicon consists of a cyan/transparent stripe filter section and a yellow/transparent stripe filter section. These stripe filters are so arranged as to be of the same pitch in the horizontal scanning direction, and have equal angles with respect to the vertical. The vidicon's even and odd scanning lines pass the tracks of the stripe filters that are arranged in the same way. In other words, the even and odd scanning lines are spaced "a" apart.

For easy understanding, let's assume that light of uniform level containing green(G), red(R), and blue(B) reaches the vidicon (Fig. 10 Ⓐ), and the crosspoint of cyan and yellow stripe filter is scanned as shown in Fig. 10 Ⓑ.

Let's consider the light output from the stripe filter. The cyan filter cuts off the red(R) light which is complementary to it, and the yellow filter cuts off the blue(B) light which is complementary to it. (Fig. 8).

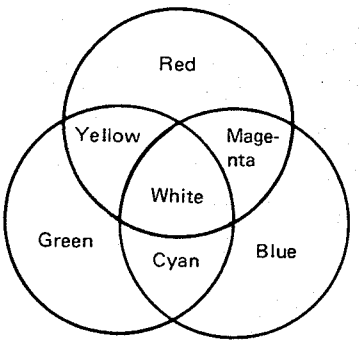

Fig. 8 Complementary Color

The light output Ⓒ, which corresponds to the Nth scanning line containes the modulated R and B components, riding on top of unmodulated G component.

The light output Ⓓ, which corresponds to the N+1st scanning line contains the modulated R and B components, riding on top of the unmodulated G component. Light output Ⓔ, Ⓕ, and Ⓖ correspond to N+2nd, N+3rd and N+4th scanning lines respectively. The light Ⓒ for the Nth line and the light Ⓖ for the N+4th line are exactly same.

The stripe filters have the same pitch in the horizontal scanning direction, and the same angle in the vertical directions so that there is a phase difference of 90° among modulated lights.

The vidicon produces the video signal whose waveform is the same as that of the light which comes from the stripe filter.

The modulation frequency for the R and B signals can be calculated from the following equation.

$$f = \frac{w \times 10^3}{p \times t} \quad \text{(MHz)}$$

Here, f: Modulation frequency (MHz)

w: Horizontal width of effective scanning area of vidicon (mm)

p: Stripe filter pitch (μm)

t: Horizontal video signal duration [line duration (1H)-horizontal blanking duration (H. BL)] (μs)

Specifically;

w = 7.45 mm

p = 40.2 μm

t = 1H − H.BL = 64 − 12.25 = 51.75

$$f = \frac{w \times 10^3}{p \times t} = \frac{7.97 \times 10^3}{40.2 \times 51.75} \fallingdotseq 3.58\text{MHz}$$

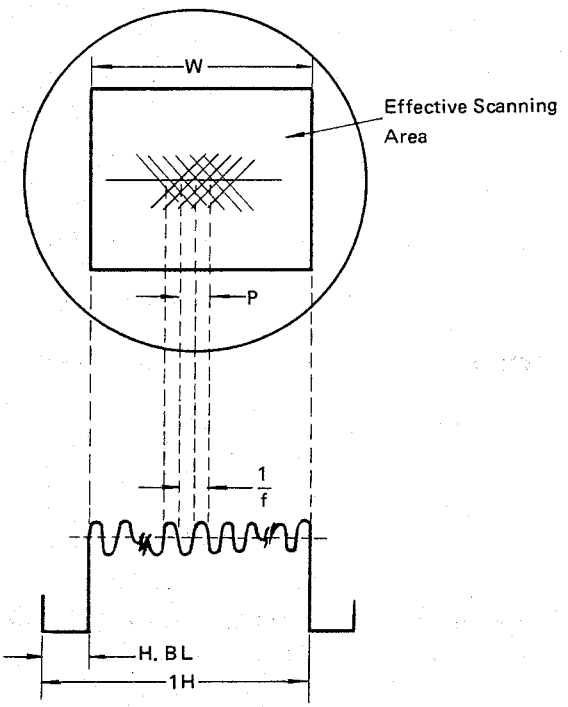

Fig. 9 Modulation Frequency

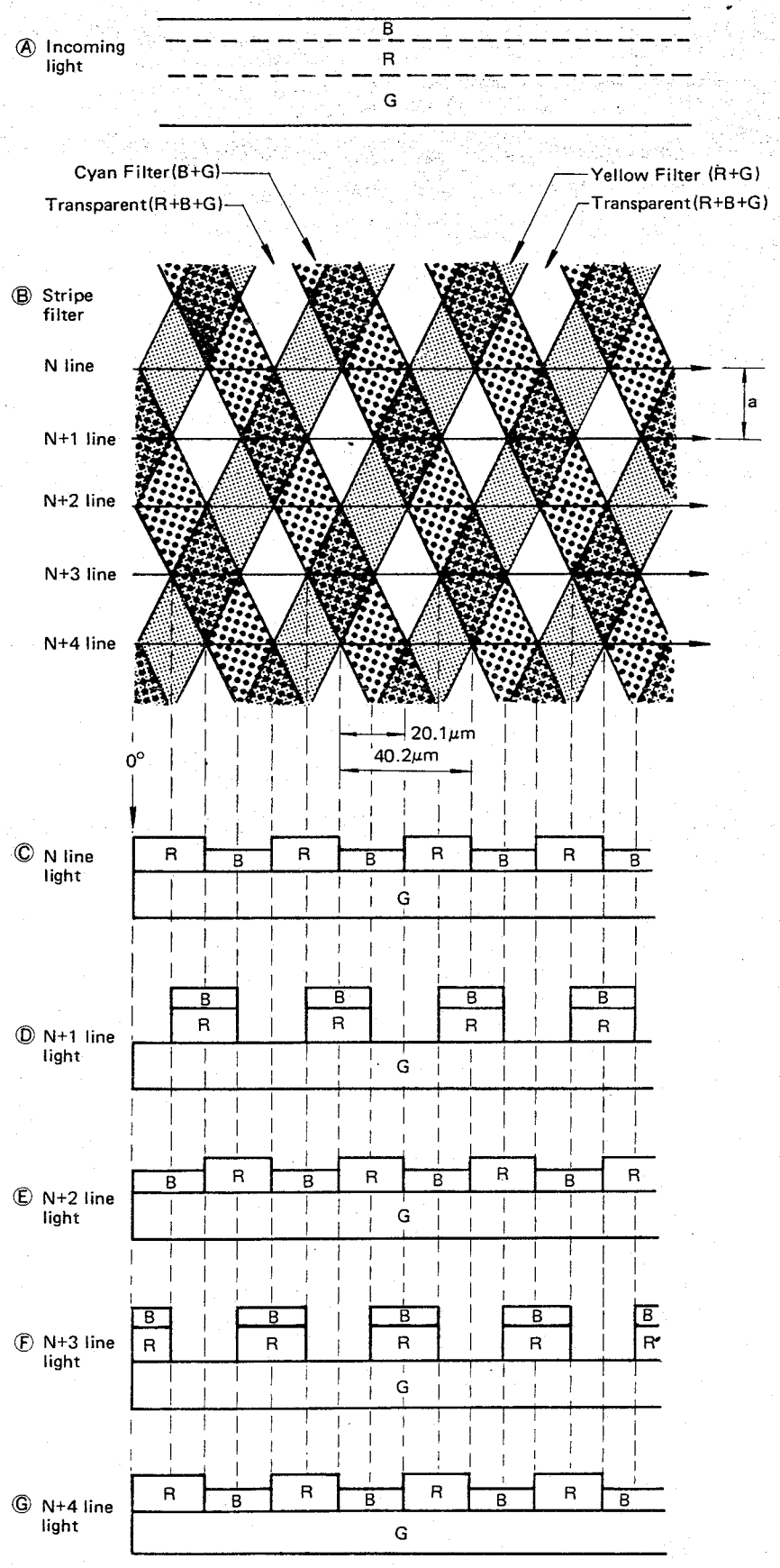

Fig. 10 Light from Stripe Filter

The incoming light is thus covnerted by the integrated stripe filter into a signal which contains R and B signals modulated by 3.58MHz, and the G signal.

This signal is sent to the preamplifier, where it is amplified. The amplified signal Ⓗ (see Fig. 12) from preamplifier is sent to the 3.58MHz trap circuit, which passes only the luminance (Y) signal Ⓘ comprising the G signal and the mean value of the modulated R and B signals. The mean value of modulated R and B signals on adjacent scanning lines are equal so that the luminance signal corresponding to two successive lines is also equal (see Fig. 11) due to the characteristics of the trap circuit.

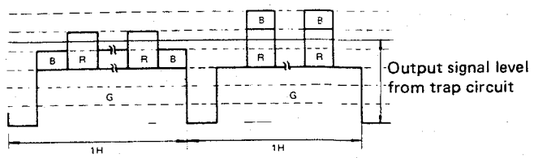

Fig. 11 Detection of Y signal

The Y signal thus obtained is supplied to the 2.8MHz low pass filter and the 0.5MHz low pass filter. The luminance (Y_H) signal having high frequency response and the luminance (Y_L) signal having low frequency response come out from these low pass filters.

The Y_H signal is supplied to the Y/chroma mix circuit and the Y_L signal to the R-Y_L and B-Y_L modulator circuits.

The amplified signal Ⓗ is also supplied to the inverter. The inverted signal Ⓙ is supplied to the band-pass-filter (B.P.F.) whose center frequency is 3.58MHz and through which only the 3.58 MHz modulated signal Ⓚ passes.

The modulated signal Ⓚ is sent to the 90° phase shift circuit and the 1H (1 line) delay circuit, from which 90° phase shifted and 1H delayed modulated signals Ⓛ and Ⓜ are obtained.

The 1H-delayed modulated signal Ⓜ is inverted and the signal Ⓝ is obtained. The modulated R(Rc) signal Ⓞ is obtained by adding the modulated signals Ⓛ and Ⓝ, and the modulated B(Bc) signal Ⓠ is obtained by subtraction of the modulated signals Ⓛ and Ⓝ. The shaded portions on the signals Ⓞ and Ⓠ are removed by mixing the line blanking pulse.

The Rc and Bc signals obtained by addition and subtraction are supplied to detectors, from which R signal Ⓟ and B signal Ⓡ are obtained. The R signal and B signal thus obtained are fed to the R-Y_L and B-Y_L modulator circuits respectively.

The chrominance signal obtained by mixing the R-Y_L and B-Y_L modulated signals is supplied to the Y/chroma mix circuit where it is mixed with the luminance (Y_H) signal to result in a PAL signal.

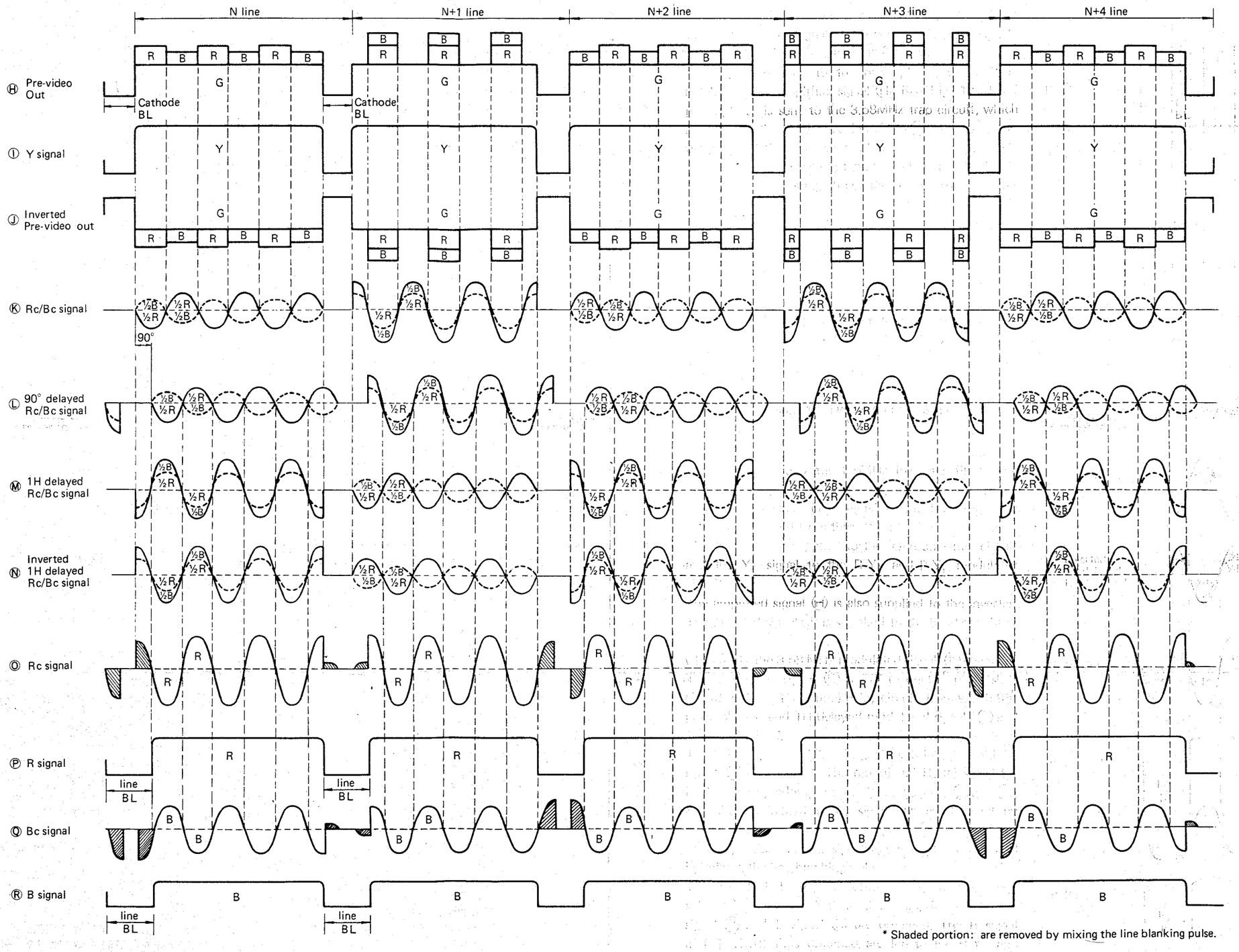

* Shaded portion: are removed by mixing the line blanking pulse.

Fig. 12

2. Preamplifier Circuit Board (YWV3201EZK01)

Outline

This circuit amplifies the video current Is (0.2μA-0.3μA) from the vidicon.

The amplified video signal is delivered to the AGC/Y signal generator circuit on the Process circuit board.

The preamplifier is a low output impedance and negative feedback amplifier which uses a low noise FET at the input.

To maintain the low noise in the signal, a so-called Percival circuit is used. It improves the S/N ratio at relatively high frequencies (where color components are located).

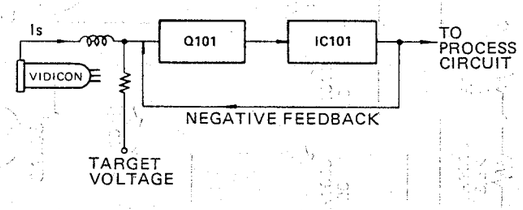

Fig. 13 Preamplifier

The video current from the vidicon, comprising the modulated red(R) and blue(B) components, and the green(G) component, is supplied to the target terminal of the preamplifier circuit and converted to the video signal by R103 through L101 Percival coil. This video signal is amplified approx. 30dB by the amplifier which consists of Q101 FET and Q1001 inside IC101. The amplified signal is then fed to Q1002 and Q1003 which amplify the input signal approx. 66dB.

The signal at the collector of Q1003 inside IC101 is negatively fed back to the gate of Q101 through a feedback circuit which consists of R1013, R1014, C107 and C108.

The VC101 (FREQUENCY RESPONSE ADJUST) adjusts the frequency response of the feedback signal and corrects the frequency response of video signal.

The video signal whose frequency response is shaped by the negative feedback is converted to the low impedance video signal with the use of a buffer Q1004 inside IC101. It is then supplied to the Process circuit board. (YWV3201EZK03).

The target voltage for the vidicon is supplied from the Deflection circuit board to terminal No. 2 (Target voltage in) of the multi-pin connector CN301. The target voltage, controlled due to the vidicon temperature drift, is supplied to the vidicon target through R101, R102 and L101.

Percival Circuit

The vidicon's output is a low noise signal, so that the video S/N is determined by the noise of the preamplifier. The S/N of the modulated R and B signal is lower than the S/N of the non-modulated signal in the low frequency range due to effects of the vidicon output capacitance and the input capacitance of the preamplifier.

Percival circuit is adopted to reduce the effects of these capacitances and improve the S/N.

The benefical effects of the Percival circuit are shown in Fig. 14. The equivalent circuit is also shown in Fig. 15.

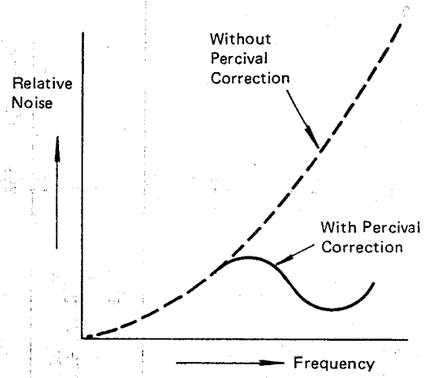

Fig. 14 Percival Correction

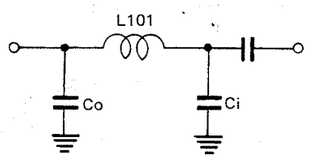

Fig. 15

Where: L101; Percival coil
Co ; Output capacitance of vidicon
Ci ; Input capacitance of pre-amp.

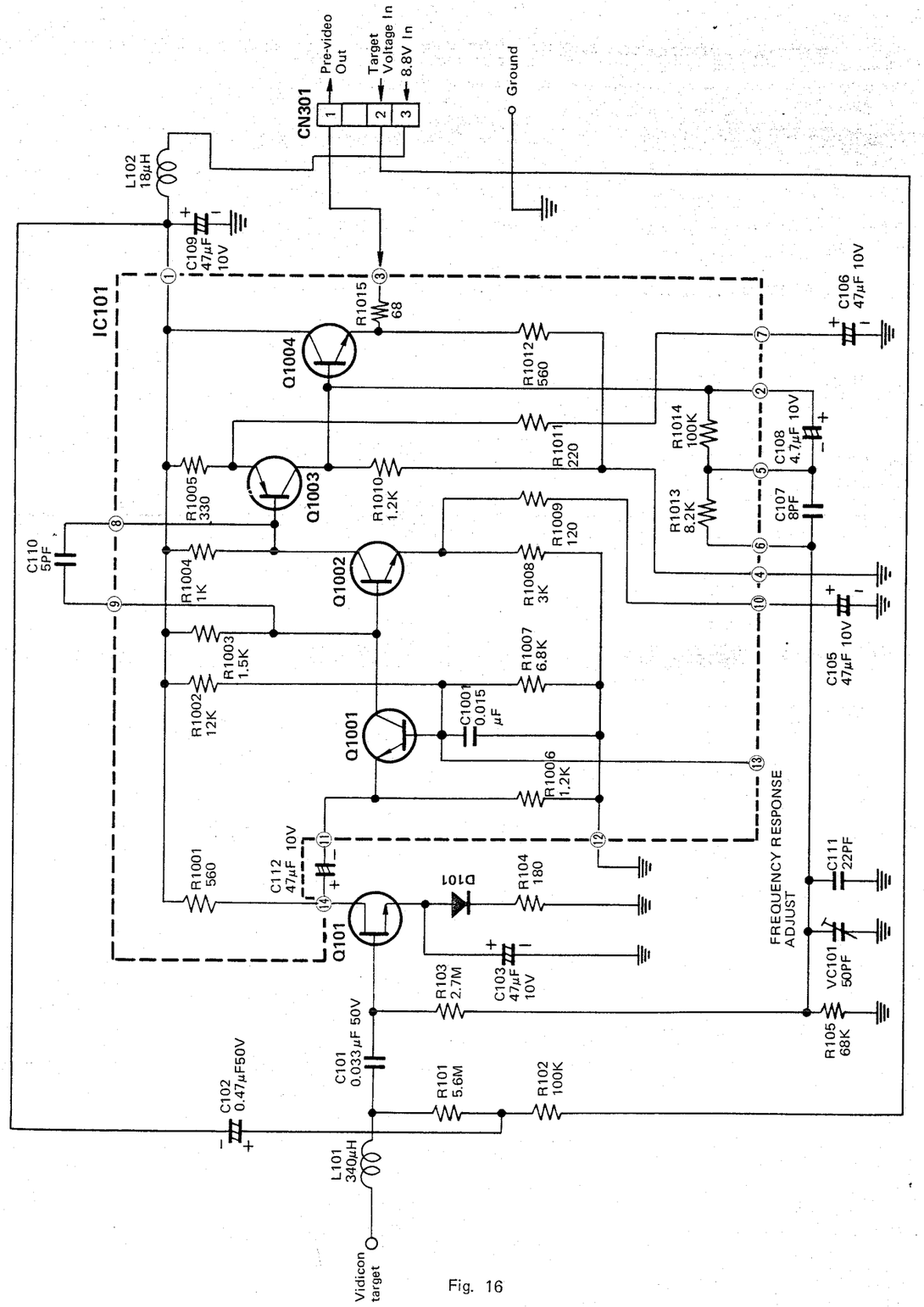

Fig. 16

3. Deflection Circuit Board (YWV3201EZK02)

The Deflection Circuit Board (YWV3201EZK02) consists of following Circuits.

		Page
3-1.	+9V Regulator Circuit	11
3-2.	+3V Regulator Circuit	11
3-3.	Target Voltage Control Circuit	11
3-4.	Audio Amplifier Circuit	12
3-5.	VCR Remote Control Circuit	12
3-6.	AIC Circuit (Automatic Iris Control Circuit)	14
3-7.	High Voltage Circuit	14
3-8.	Sawtooth/Parabola Waveform Generator Circuit	15
3-9.	Shading Correction Signal Generator Circuit	16
3-10.	Dark Shading Correction Circuit	16
3-11.	Dynamic Focus Correction Circuit	17
3-12.	Horizontal Deflection Circuit	18
3-13.	Horizontal Linearity Correction Circuit	19
3-14.	Vertical Deflection Circuit	20
3-15.	Vidicon Protection Circuit	21
3-16.	White Balance Drive Circuit	21
3-17.	Standby Circuit	22

3-1. +9V Regulator Circuit

Outline

This circuit produces a regulated +9V power from the +12V power supplied from the portable VCR or power supply.

Details

The +12V power from the portable VCR or power supply is applied to the emitter of Q001 mounted on the chassis.

Transistor Q215 amplifies the error between the 6.2V zener (D207) reference and its base potential set by VR219 (9V ADJUST) and forwards it to Q001 base through Q216/217. If the Q001 collector potential changes, the base potential of Q215 also changes, and a voltage change appears at its collector.

This change is amplified by Q216 and Q217 to control the base current of Q001 in the direction which opposes the voltage change at Q001 collector.

As a result, the output voltage remains constant.

Transistor Q217 is a protection circuit which protects the power transistor Q001 from breakdown due to overcurrent. If an overcurrent condition arises due to a circuit failure for example, the base current of Q001 increases so that the emitter voltage of Q217 rises, cutting OFF Q217. When Q217 is deenergized, Q001 is also turned OFF so that no overcurrent can flow through Q001. Thus Q001 is protected. VR219 is adjusted for 9V, and VR220 (CURRENT LIMITER) is a control for setting the current level at which Q001 becomes deenergized. D402 is the power indicator LED on the rear panel.

3-2. +3V Regulator Circuit

Outline

+3V is generated by regulating the +9V generated in the +9V regulator circuit. +3V is used as a power supply for light emitting diode (LED) and vidicon heater, and as sub-power supply for other circuits.

Details

The +3V power is generated by regulating the +9V power supply using IC201(1/2) and Q207. The output voltage of IC201 is applied to the base of Q207 and the emitter output of Q207 is applied to pin No. 7 of IC201 to form a feedback loop, and thus stabilizing the voltage. The reference voltage is obtained by dividing the +9V using R211 and R212.

3-3. Target Voltage Control Circuit

Outline

The pick up tube gives out an output signal which corresponds to the incoming light intensity. Even when no light reaches the tube, an output signal, called dark current, is produced. The vidicon's dark current is relatively large and varies according to the vidicon temperature so that the black level of the output signal tends to drift causing color shift.

The target voltage control circuit detects the vidicon's temperature variation, and controls the target voltage according to the temperature drift, and thus reduces dark current variations. This circuit, and the optical black clamp circuit, minimize the black level variations.

Details

The deflection coil assembly has a built-in temperature detecting thermistor which is connected between terminals 5 and 6 of the multi-pin connector CN205.

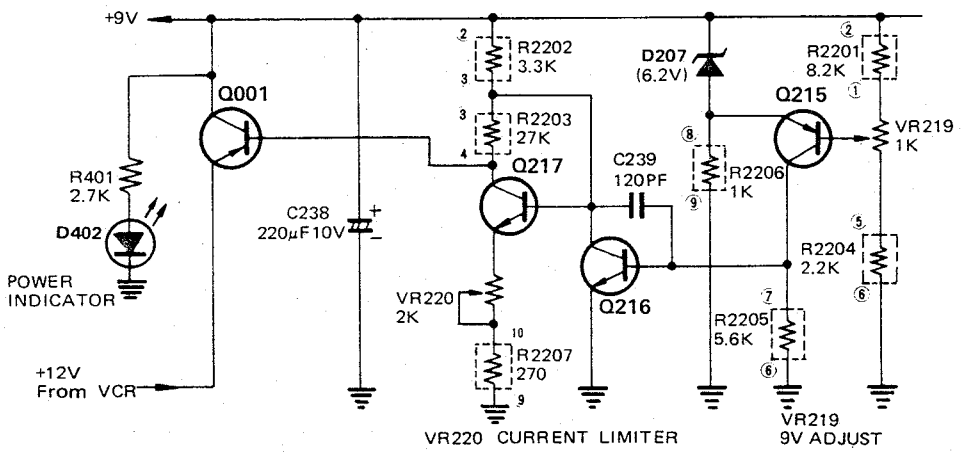

Fig. 17

When the inside temperature of the coil assembly changes (it also changes in the vidicon), the thermistor resistance changes, causing the emitter voltage of the DC amplifier Q218 to change which in turn changes the collector voltage.
The target voltage applied to the vidicon is set by VR221 (TARGET). If the temperature goes up, the resistance of the thermistor decreases so that the total resistance connected between the emitter of Q218 and ground decreases, and the current flowing through the collector and emitter increases.
Accordingly, the collector potential of Q218 falls, and the target voltage which is set by VR221 is reduced.
Reduced target voltage causes less output from the tube. In this way, the video dark current which is raised by an increase in temperature is lowered. When the temperature falls, the reverse operation takes place.

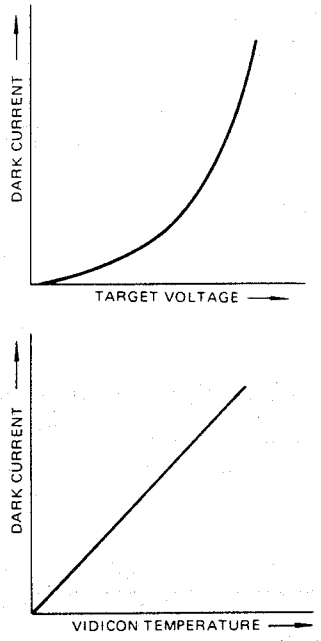

Fig. 18 Characteristic of Vidicon

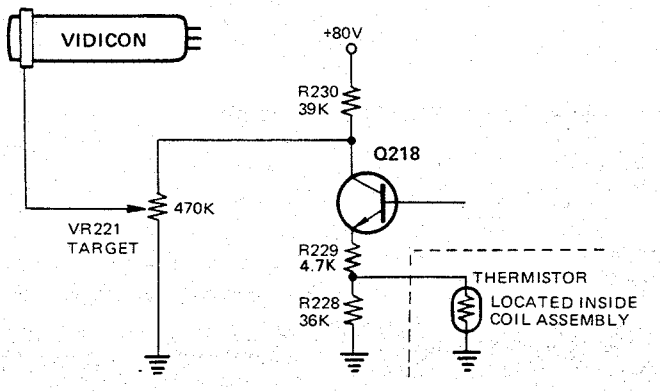

Fig. 19

3-4. Audio Amplifier Circuit

Outline

This circuit amplifies the output from the mounted boom microphone or external microphone, and sends out the amplified audio signal to the VCR for recording.

Details

The −72dB output from the electret condenser microphone (which is mounted on the camera), or an external microphone, is amplified +52dB by Q201 and Q202. The low-frequency response characteristic of the audio output is set by C202, C204, R2004 and its high-frequency response characteristic by C205.
The −20dB audio output is sent directly from the collector of Q202 to the portable VCR, or via power supply, to the desk-top type VCR.

3-5. VCR Remote Control Circuit

Outline

This circuit consists of a flip-flop which generates Video Cassette Tape Recorder (VCR) start/stop (pause) control signal. When the VCR is set to the recording mode, the VCR is started by a high potential from this circuit. If a low potential is sent to the VCR, it stops (pauses).

Details

When the power switch is turned ON, Q206 turns ON momentarily due to the time constant of C211 and R202. Therefore, the collectors of Q206, Q205 and the base of Q204 become low causing Q204 to turn OFF. As a consequence, Q205, whose base is tied to the collector of Q204, turns ON because the collector of Q204 is high.
At this time the VCR remote control circuit assumes a steady state. When the VCR is set into the record mode, the high potential at the collector of Q204 is inverted by Q203 and fed via terminal No. 1 of the multi-pin connector CN201 to the VCR to stop (pause) it.
At the same time, a high potential at the collector of Q204 turns OFF inverter Q226. Therefore, no current flows to the VCR recording indicator D401 and D1001 in the electronic viewfinder connected to the collector of Q226 and they are turned OFF.
When the non-lock type VCR start/stop switch SW001 is depressed (refer to "FIRST TRIGGER" in Fig. 21), the negative trigger pulse is generated due to the time constant of R2056 in block resistor network BR202 and C212. It is fed to both bases of Q204 and Q205, and causes the flip-flop Q204/Q205 to change its state. The low potential at the collector of Q204 is inverted to a

high by Q203 and fed to the VCR to start recording. At the same time, the low potential at the collector of Q204 turns ON Q226 and the current flows to the VCR recording indicators D401 and D1001 lighting them up. When a subsequent trigger pulse is sent to both bases of Q204/Q205 by depressing SW001 again (refer to "SECOND TRIGGER" in Fig. 21), the flip-flop is inverted, switching OFF Q204. As a result, the VCR is stopped and recording indicators go OFF.

When the VCR is set into the playback mode, an inhibit signal (high level) from the VCR is supplied to the base of Q205 passing through D212 so that Q205 is forced ON while Q204 turns OFF. In this state, even if the another trigger pulse is sent to both bases of Q204/Q205 by depressing SW001 again, the flip-flop remains set.

Therefore, no current flows to the VCR recording indicators and no VCR recording control signal is sent to VCR from Q203. This condition is maintained until the playback mode is released and set to the recording mode again.

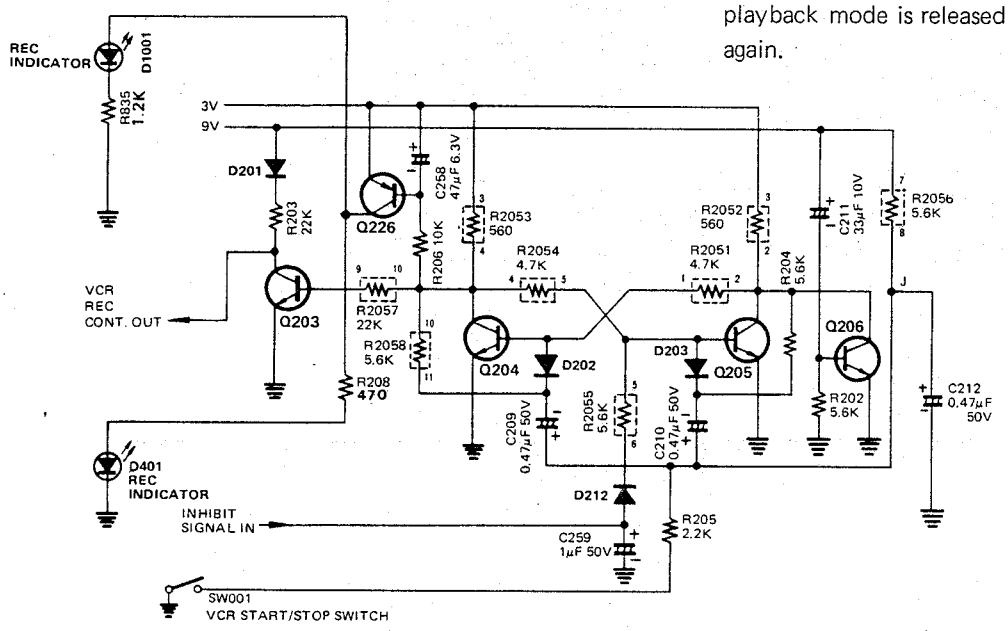

Fig. 20

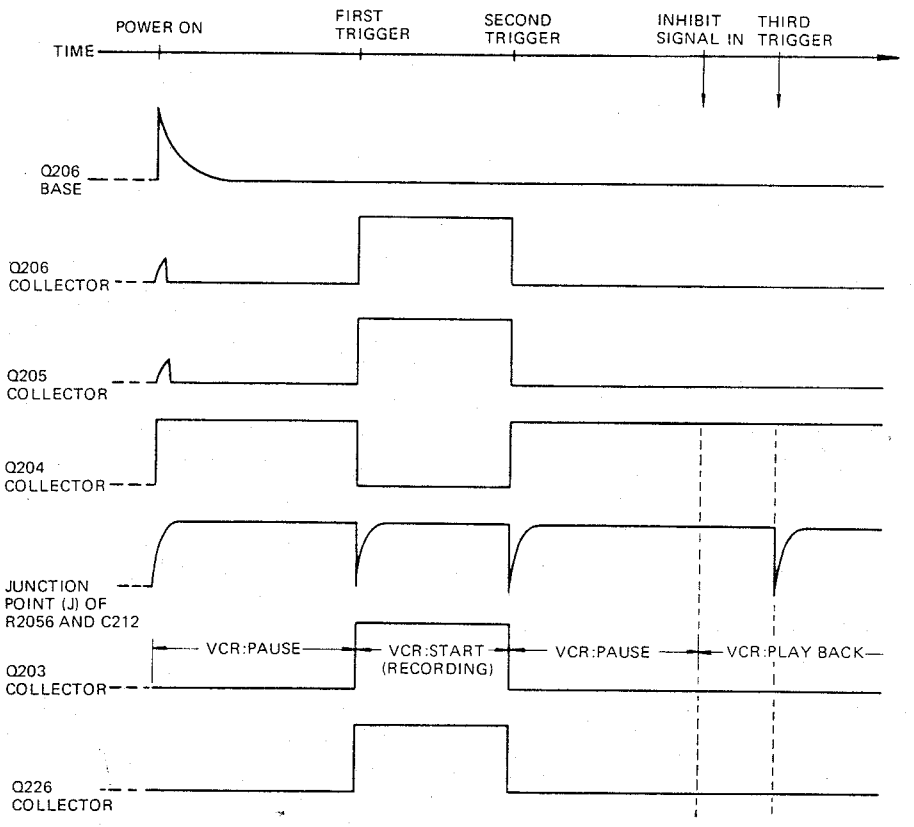

Fig. 21

3-6. AIC Circuit (Automatic Iris Control Circuit)

Outline

The camera has a system which controls the iris automatically according to the incoming light intensity. This circuit receives the DC voltage corresponding to the light intensity from the Process circuit board (YWV3201EZK03). The DC voltage supplied is amplified and fed to the automatic iris control motor to drive the iris mechanism. The lens iris is closed when the power is turned OFF for vidicon protection.

Details

In the Process circuit board, the luminance (Y) signal Ⓐ is obtained by removing the chrominance signal from the Y/chroma mixed signal.

The Y signal is then rectified and converted into DC voltage corresponding to the Y signal level i.e., the incoming light intensity. This DC voltage corresponding to the incoming light intensity is supplied from the Process circuit board through terminal No. 9 of CN303 to pin No. 3 (inverting input) of the differential DC amplifier IC201, where it is amplified.

The amplified DC voltage at pin No. 2 of IC201 is then applied to the AIC motor via terminal No. 4 of CN203 for driving the iris control motor. If the incoming light intensity goes down, the detected Y signal decreases so that the DC voltage which is obtained by rectifying the Y signal also goes down. When an decreasing DC voltage is applied to the inverting input of IC201, the output from IC201 increases.

This output is applied to motor to open the lens iris. When the incoming light intensity increases, reverse operation takes place. In this way, the incoming light to the vidicon and the preamplifier output level are maintained constant.

When the incoming light intensity is extremely low, and the lens iris is wide open, the automatic gain control circuit in the Process circuit board starts to operate. (Refer to AGC/Y signal generator on page 25.)

When the light intensity changes and the iris control motor is operated, the electromotive force appears in the motor damper coil. DC current from the damper coil is negatively fed back to pin No. 3 of IC201 through terminal No. 5 of CN203 to damper the unwanted iris hunting due to small changes in light intensity. VR201 (AUTO IRIS CONTROL) is a control for setting the normal iris stop at the standard light intensity by adjusting the amplitude of IC201 output. Switch SW002 connected to VR201 through R2356 is the "back light correction switch" and it works as follows:

When the camera is pointed at the scene which includes an extremely bright object, the lens iris is closed accordingly. However, the signal level for other objects in the same scene is reduced, and they cannot be seen clearly. In this case, the lens iris can be opened one F-stop by increasing the bias on pin No.4 of IC201. This is done by setting SW002 to the lower position (+).

Conversely, the lens iris can be closed one F-stop by decreasing the bias with SW002 set to the upper position (–).

When the power switch is turned OFF, the +3V which is supplied to the motor via pin No. 7 of CN203 falls to zero and the lens iris is closed. The DC voltage from IC201 is fed to the AGC/Y detection circuit in the Process circuit board via R207 and terminal No. 3 of CN305 to operate AGC circuit.

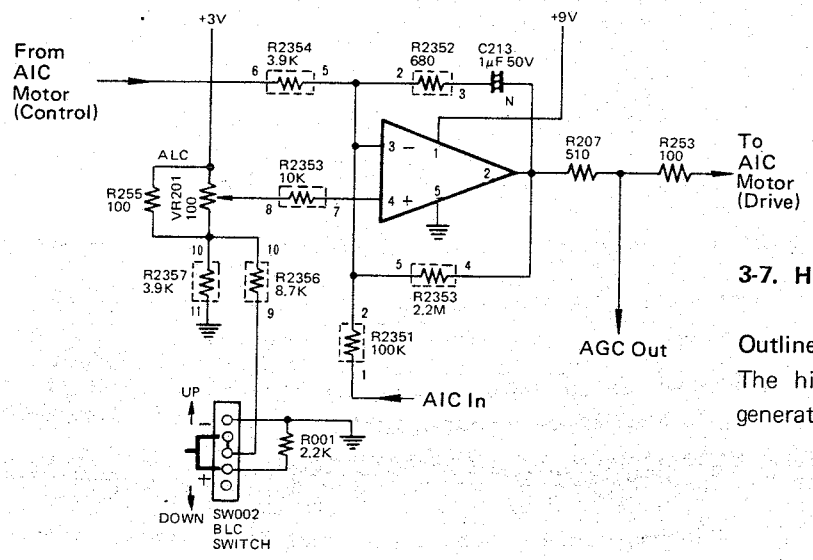

Fig. 22

3-7. High Voltage Circuit

Outline

The high voltage circuit uses a DC-DC converter to generate high voltages needed for the vidicon.

Details

The horizontal scanning start pulse(Hs) is supplied to pin No. 1 of flip-flop IC202 from the Process circuit board through inverter Q219 in the horizontal deflection circuit.

The output pulse at pin No. 2 of IC202 is one half of the horizontal frequency (15.625/2 kHz) and has a 50/50 duty cycle. This pulse is clamped to 9V and ground potential by D205 and D204 respectively, and is supplied to drive transistors Q208 and Q209. Q208 and Q209 drive the converter transformer T2001 in the high voltage pack U201. Boosted pulses of 160Vp-p, 350Vp-p and 1.2kVp-p amplitude are obtained from the secondary winding of T2001. The 160Vp-p pulse is rectified by D2155 and C2154 to produce 80VDC which is supplied to the dynamic focus correction, dark shading correction, and target voltage control circuit.

The 160Vp-p pulse is also rectified by D2156 and C2153 to produce −65VDC which is supplied to grid-1(G1) electrode of vidicon through beam control VR202. The 350Vp-p pulse is rectified and doubled by D2153, D2154, C2152 and C2155 to produce 350VDC supplied to grid-2(G2) electrode. The 1.2kVp-p pulse is rectified and doubled by D2151, D2152, C2151 and C2156, and clamped to 350V via D2152 to produce 1.55kVDC with respect to the cathode. 1.55kVDC is supplied via the vidicon socket board (YWV4001ZK13) to grid-6 (G6) electrode. The DC voltages for grid-5 (G5) and grid-4 (G4) are obtained by dividing 1.55kVDC by block resistor BR208 and VR203 (FOCUS).

3-8. Sawtooth/Parabola Waveform Generator Circuit

Outline

This circuit generates the vertical and horizontal sawtooth and parabola waveforms needed in the dark shading correction circuit, dynamic focus correction circuit, and signal shading correction generator circuit on the Deflection circuit board. The vertical sawtooth and parabola signals are also supplied to the AGC/Y signal generator circuit in the Process circuit board.

Details

The vertical scanning start (Vs) pulse from the Process circuit board enters the base of Q2101 in sawtooth/parabola waveform generator IC203 through pin No. 2. Q2101 is switched by the Vs pulse, generating a vertical (V) sawtooth signal using R2102, R2103 and C223 as an integrator. The V sawtooth signal obtained at the junction point of R2102 and R2103 is supplied to the wiper arm of VR206 (B-V SAW) and VR210 (R-V SAW). The V sawtooth signal obtained at the emitter of Q2102 is supplied through pin No. 6 to the wiper arm of VR215 (V SAW) in the dynamic focus correction circuit, and to the Process circuit board through terminal No. 2 of CN305. The V sawtooth signal obtained at the collector of Q2102 is converted into a V parabola signal by R2105 and C225 integrator and supplied to the wiper arm of VR207 (B-V PARA) and VR211 (R-V PARA), and VR214 (V PARA) through buffer Q2103 and pin No. 8. The V. parabola signal is also supplied to the Process circuit board through terminal No. 5 of CN305.

The horizontal scanning start pulse (Hs) from the Process circuit board enters the base of Q2104 in IC203 through its pin No. 11. Q2104 is switched by the Hs pulse, generating a horizontal (H) sawtooth signal using R2108, R2109 and C2101 as an integrator.

The H sawtooth signal at the junction point of R2108 and R2109 is fed to the wiper arm of VR205 (B-H SAW) and VR209 (R-H SAW) through pin No. 10. The H sawtooth signal obtained at the emitter of Q2105 is supplied to the wiper arm of VR217 (H SAW) in the dynamic focus correction circuit and VR212 (H SAW) in the dark shading correction circuit. The H sawtooth signal at the collector of Q2105 is integrated by R2111 and C2102 and converted into a H parabola signal. It is sent to the wiper arm of VR204 (B-H PARA), VR208 (R-H PARA), VR213 (H PARA) and VR216 (H PARA) for H parabola correction through buffer Q2106 and pin No. 16.

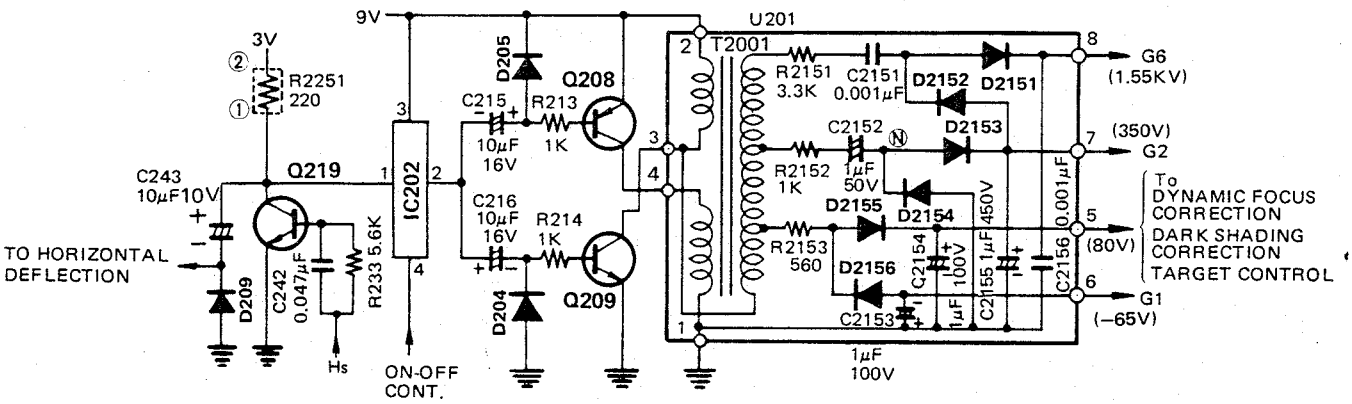

Fig. 24

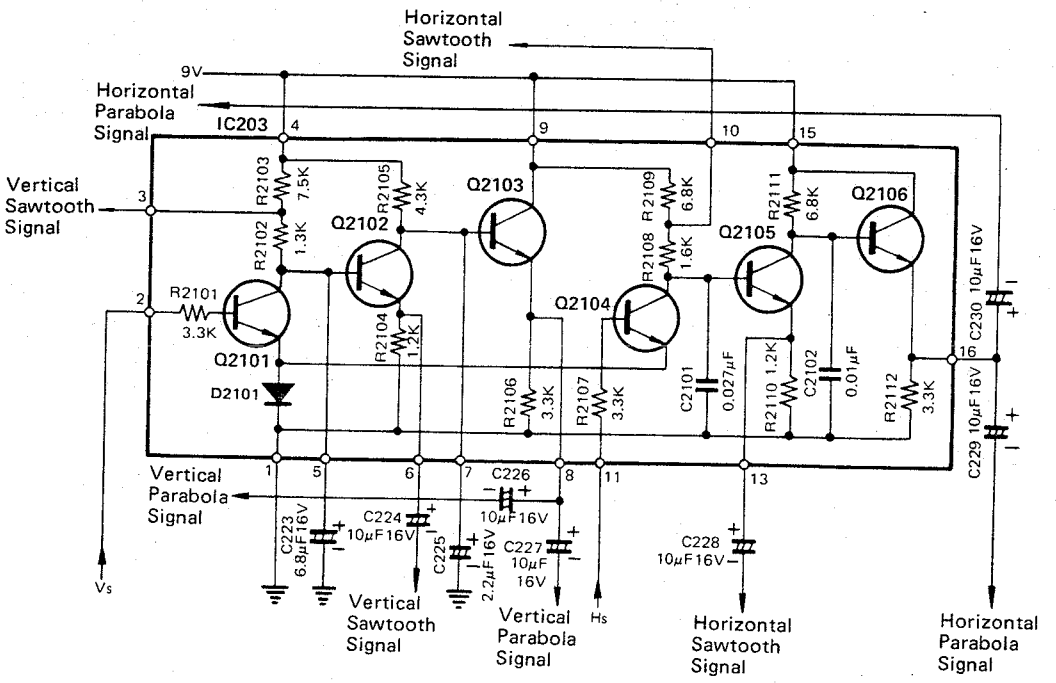

Fig. 25

3-9. Shading Correction Signal Generator Circuit

Outline

Even when dynamic focus correction signals are applied to vidicon's grid-4 (G4), the non-uniformity of modulation due to uneven focus on the vidicon target cannot be completely eliminated. (See the description of the dynamic focus circuit). Modulation non-uniformity also occurs due to non-uniform structure in the photoconductive layer of the vidicon (manufacturing tolerance). The shading correction signal generator circuit receives the horizontal (H) and vertical (V) sawtooth and parabola signals generated in the sawtooth/parabola waveform generator circuit and sends them to the red and blue carrier signal separation circuit in the Process circuit board (YWV3201EZK03) which compensates for residual picture shading.

Details

The vertical parabola and sawtooth, and horizontal parabola and sawtooth signals, which are generated by the sawtooth/parabola waveform generator IC203 are applied to the wiper arms of the VR204 (B-H PARA), VR205 (B-H SAW), VR206 (B-V SAW) and VR207 (B-V PARA) and they are adjusted for suitable levels (balance or misbalance, whichever is desired) before they are forwarded to differential amplifier IC309 for blue separation in the Process circuit board. IC309, aside from performing other functions, performs signal shading correction. The vertical and horizontal parabola and sawtooth signals are applied to the wiper arms of VR208 (R-H PARA), VR209 (R-H SAW). VR210 (R-V SAW), VR211 (R-V PARA), and they are similarly forwarded to differential amplifier IC308 for red separation in the Process circuit board in order to correct the red signal shading.

Note: Signal shading adjustments are a last resort adjustments for residual color non-uniformity when a white card is being shot. Electrical focus, dynamic focus, and dark shading adjustments must be made prior to signal shading in order to eliminate over-compensation.

3-10. Dark Shading Correction Circuit

Outline

The vidicon produces dark current when the light is blocked by capping the lens for example. The dark current is not uniform along the entire target structure, but has a "shading"Ⓐ. As described in the section on the principles of signal carrier frequency multiplexing, the red and blue signals are obtained by detecting the modulated signals from the preamplifier output using a band pass filter.

Therefore, the red and blue signals are free from dark shading. However, the luminance signal is obtained by removing the modulated signal using a trap circuit. Therefore, the luminance signal receives undesirable dark shading. The dark shading correction circuit supplies horizontal sawtooth and parabola signals Ⓑ to the vidicon cathode (K) to correct color shading at low illumination levels.

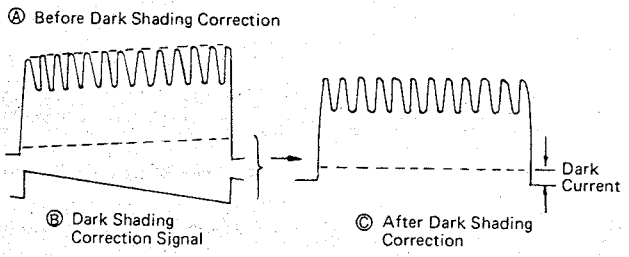

Fig. 26

Details

The horizontal sawtooth and parabola signals which are generated by the sawtooth/parabola waveform generator (IC203) are routed to the wiper arms of the dark shading controls VR212 (H SAW) and VR213 (H PARA) from pins No. 13 and No. 16 of IC203 respectively. These signals are applied to both the base and emitter of Q210, where they are amplified.

The collector of Q210 produces a positive or negative dark shading correction signal which depends on the position of these controls.

The horizontal scanning start (Hs) pulse is applied to the base of Q213 from the collector of Q219 through C234 and R2508 and the vertical sawtooth signal to the base of Q214 from pin No. 5 of IC205 through C237 and R225, where they are mixed and switched. The horizontal/vertical mixed pulse is supplied from the collector of Q213/Q214 to the base of Q211 as a beam (cathode) blanking pulse, which is mixed with the dark shading correction signal at Q211 before being sent to the cathode (K) of the vidicon.

Note: Dark shading must be adjusted if the picture exhibits color non-uniformity when the lens is capped and chroma level on the monitor is turned up fully.

3-11. Dynamic Focus Correction Circuit

Outline

Generally, the focus voltage which brings the beam in focus in the center part of the pick-up tube is different in level from the voltage which brings the edge portions of the pick-up tube into best focus so that the modulation depth for the center part and the edge portions of the pick-up tube differ. When the camera is directed at an evenly illuminated white object, the red and blue signals modulated at 3.58MHz do not have a uniform level, and as a result, a color shading appears (Fig. 28 Ⓐ).

The dynamic focus correction circuit supplies horizontal (H) and vertical (V) sawtooth and parabola signals to the vidicon focus electrode (grid-4) together with the DC focus voltage from the high voltage circuit to focus the electron beam along the entire scanning area for correcting unevenness of modulation factor (Fig. 28 Ⓑ).

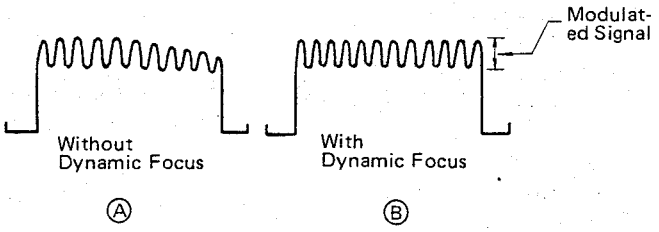

Fig. 28

Details

The vertical sawtooth signal from pin No. 6 of sawtooth/parabola waveform generator IC203, the vertical parabola signal from pin No. 8 of IC203, the horizontal sawtooth signal from pin No. 13 of IC203 and the horizontal parabola signal from pin No. 16 of IC203 go to the wiper arms of dynamic focus control VR215 (V SAW), VR214 (V PARA), VR217 (H SAW) and VR216 (H PARA) respectively.

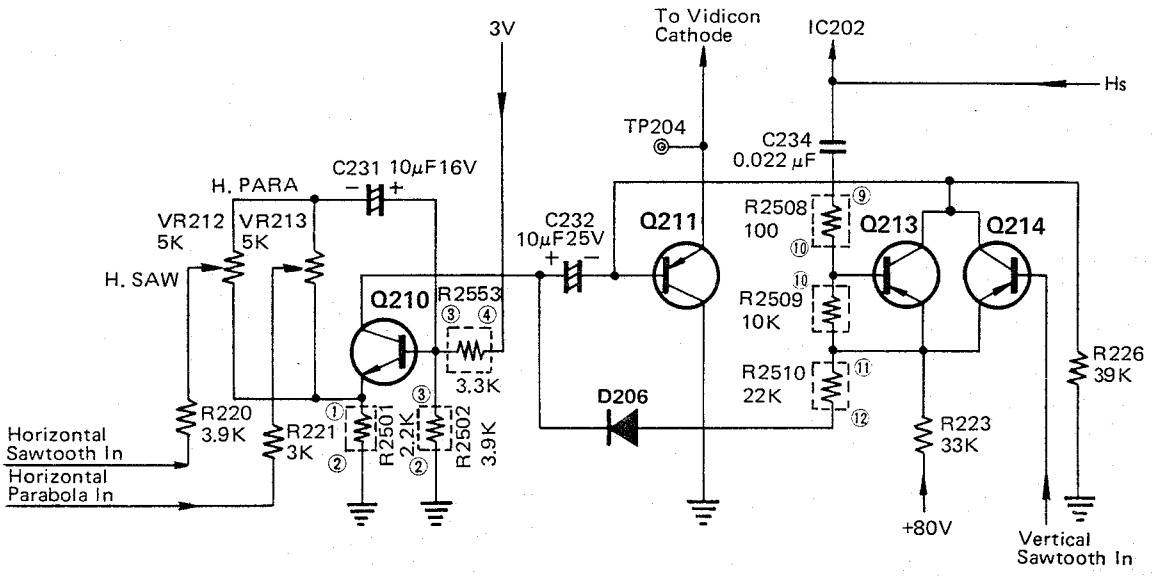

Fig. 27

These waveforms are applied to both the base and emitter of Q212, where they are amplified. The collector of Q212 produces an inverted or non-inverted signal depending on the position of these controls. The dynamic focus correction waveform at the collector of Q212 is AC coupled via C222 into vidicon grid-4 (G4) electrode which normally receives the DC voltage adjusted by VR203 (FOCUS).

In this way, the electron beam is focused along the entire scanning area, and the unevenness of modulation is corrected.

Note: Dynamic focus should be adjusted when color non-uniformity is seen in the picture of a white card after dark shading is properly adjusted and after electrical focus and beam alignment are correctly set. To judge whether the camera needs this adjustment, signal shading potentiometers VR208-VR211 must be at their mechanical centers. Be aware that proper beam alignment has greater contribution to color uniformity than dynamic focus even though it is more difficult to achieve in a hurry.

3-12. Horizontal Deflection Circuit

Outline

This circuit generates the sawtooth current for the horizontal (H) beam deflection inside the vidicon, supplying it to the horizontal deflection coil.

Details

The horizontal scanning start (Hs) pulse supplied from the Process circuit board (YWV3201EZK03) goes via inverter Q219 to horizontal deflection output Q220. When Q220 is switched by the Hs pulse from Q219, the collector current pulse of Q220 resonates with L203 and C246, and the resultant horizontal sawtooth current is supplied to the horizontal deflection coil.

VR222 (H SIZE) is a control for adjusting the horizontal scanning size.

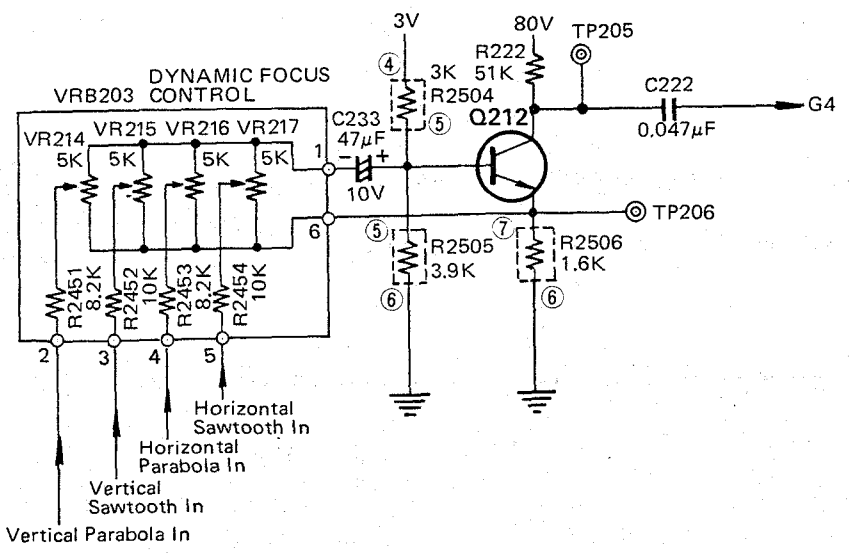

Fig. 29

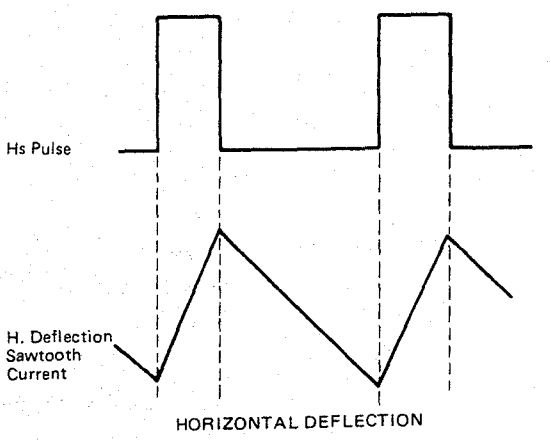

Fig. 30

3-13. Horizontal Linearity Correction Circuit

Outline

The horizontal (H) deflection circuit is of a switching type, so that the generated sawtooth current waveform has poor linearity. By feeding the sawtooth current to the deflection coil, the intensity of the magnetic field generated in the deflection coil is not linear as the vidicon's electron beam is deflected.

If a linear sawtooth current Ⓐ is sent to the deflection coil, however, the magnetic field in the scanning start portion is distored Ⓑ due to the effect of the vidicon's electrodes, coil hysterisis, etc. As a result, the linearity of the scanning start portion deteriorates, and a shading (unevenness of amplitude) appears on the left edge of the picture.

Therefore, in order to generate a linear magnetic field intensity Ⓓ and to correct the linearity and shading of the scanning start portion, it is necessary to feed a nonlinear sawtooth signal Ⓒ to the deflection coil.

Details

This circuit generates a waveform to "correct" the linearity of horizontal sawtooth current waveform and its starting portion. As shown in Fig. 32, the horizontal deflection circuit is connected to one end of the horizontal deflection coil, and the horizontal linearity correction circuit to the other end.

The horizontal flyback pulse Ⓔ produced from the collector of Q220 in the horizontal (H) deflection circuit is integrated by L202 and R2252 in the block resistor BR206 into a sawtooth signal Ⓕ.

This sawtooth signal is again integrated by L202 and C248 into a parabola signal Ⓖ, which is applied to pin No. 3 of a differential amplifier IC204 as a horizontal linearity correction signal.

The horizontal flyback pulse Ⓔ from Q220 is integrated by R236 and C249 into a linearity correction signal Ⓗ for correcting the linearity of the starting portion of the horizontal sawtooth current waveform. The linearity correction signal Ⓗ is applied to pin No. 2 of IC204 where the linearity correction signal and the starting portion linearity correction signal are mixed and amplified.

The mixed signal Ⓘ of these linearity correction signals is fed to the horizontal deflection coil to correct the linearity of the horizontal sawtooth current waveform. VR223 (H LIN) is a control for adjusting the linearity of the starting portion. VR224 (H CENTERING) is a centering control which controls the positive input potential of IC204 to change the direct current flowing to the deflection coil, and thus sets the horizontal scanning position on the vidicon.

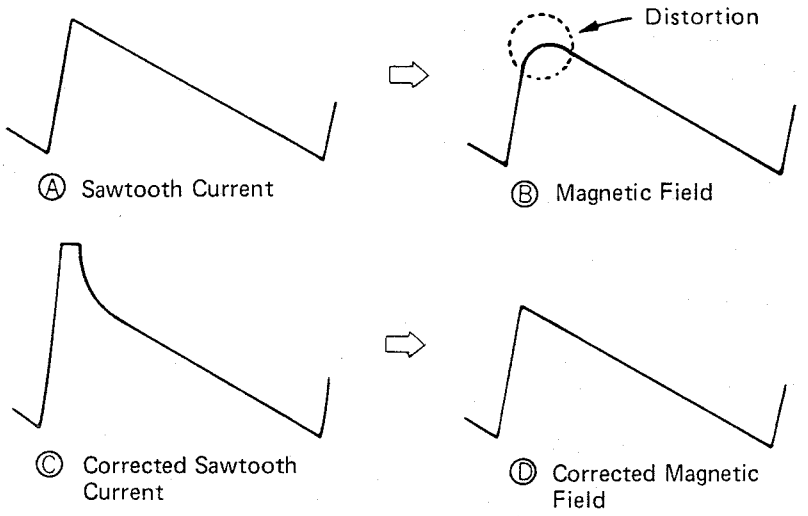

Fig. 31

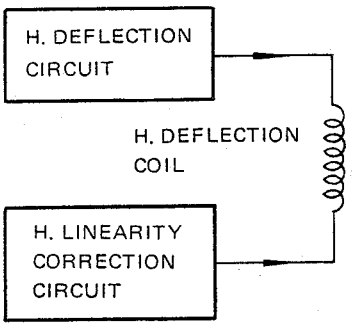

Fig. 32

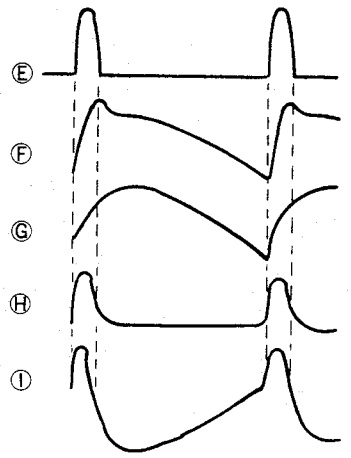

Fig. 33

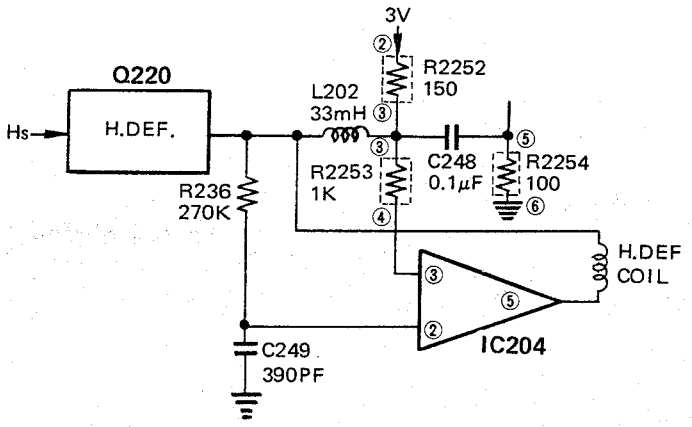

Fig. 34

3-14. Vertical Deflection Circuit

Outline

This circuit generates a sawtooth current for the vertical (V) beam deflection inside the vidicon, feeding it to the vertical deflection coil.

Details

The vertical scanning start (Vs) pulse sent from the Process circuit board (YWV3201EZK03) is fed via inverter Q223 to sawtooth generator Q224 which converts it into a vertical rate sawtooth.

This sawtooth signal is applied to pin No. 3 of the amplifier IC205, which produces an amplified vertical sawtooth signal from its output pin No. 5. This amplified signal is sent to the vertical deflection coil. The sawtooth current flowing to the vertical deflection coil is detected by R240 which is connected in series with the deflection coil, and fed back to sawtooth generator Q224, thus correcting the linearity of the vertical sawtooth waveform. Therefore, a linear sawtooth current flows in the vertical deflection coil.

The vertical sawtooth waveform obtained from pin No. 5 of IC204 is supplied to the horizontal/vertical mixing circuit Q213/Q214 to make up a vertical blanking signal for the vidicon.

The vertical sawtooth signal detected by R240 is applied through R2308 to the emitter of Q225, where it is amplified. The DC voltage obtained by rectifying the amplified vertical sawtooth signal from Q225 by Q227 and C252 is applied to the base of Q222 in the vidicon protection circuit to hold Q222 ON as long as the vertical deflection sawtooth signal is present. If vertical deflection (sweep) should fail, Q222 will turn OFF and high voltage generation will stop in order to protect the vidicon. (Refer to 3-15. Vidicon protection circuit on page 21.) VR225 (V SIZE) is the control for changing the amplitude of the vertical deflection sawtooth waveform to set vertical scanning size. VR226 (V CENTERING) is a centering control which controls the direct current flowing to the vertical deflection coil to set the vertical scanning position on the vidicon.

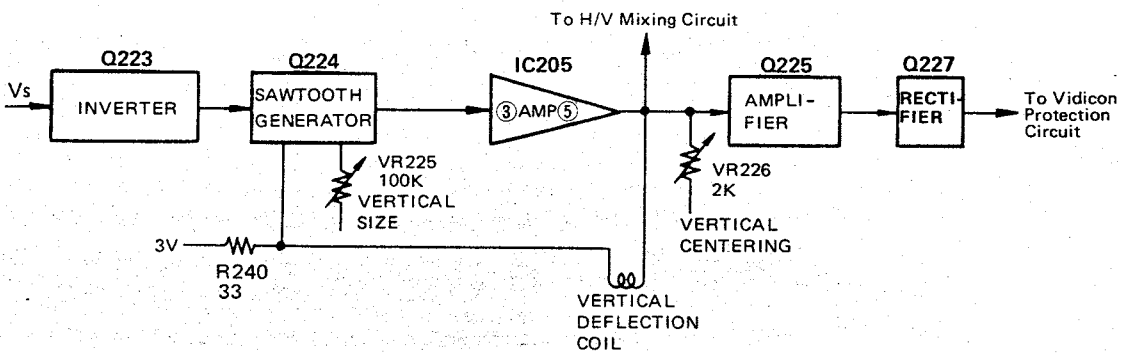

Fig. 35

3-15. Vidicon Protection Circuit

Outline

If no deflection current flows to the deflection coil due to a horizontal (H) or vertical (V) deflection circuit failure, the vidicon's scanning stops.

As a result, the photoconductive layer of the vidicon burns out in one spot making the vidicon unusable. The vidicon protection circuit protects the photoconductive layer from burn-out in the event of a deflection circuit failure by stopping the generation of high voltages supplied to the vidicon grids and thus cutting off the electron beam.

Details

The vertical deflection sawtooth signal from the vertical deflection circuit is supplied to the emitter of amplifier Q225.

The amplified vertical sawtooth signal obtained at the collector of Q225 is rectified by Q227 and C252. The rectified DC voltage is applied to the base of Q222.

The horizontal deflection signal obtained from the collector of horizontal deflection output Q220 is rectified by D210 and C245. Under normal conditions, the rectified DC voltage is about 6V. The 7V zener diode D211 blocks it from going to the base of Q221. Therefore, the base of Q221 has a low potential. In this case, Q221 is out OFF, and Q222 is turned ON by the rectified DC voltage from Q227. Thus ground terminal 4 of IC202 is grounded, and IC202 operates as a flip-flop. If the vertical deflection circuit fails, the DC voltage is not applied to the base of Q222 and Q222 is cut OFF. Also, if Q219 in the horizontal deflection circuit fails, the Hs pulse is not sent to IC202. If Q220 fails or if the multi-pin connector CN205 to which the coil assembly is connected is disconnected, the potential at the collector of Q220 increases above 7V, so that a positive DC voltage causes Q221 to turn ON cutting OFF Q222, and the operation of IC202 is stopped.

High voltage generation is thus inhibited.

3-16. White Balance Drive Circuit

Outline

This circuit receives the DC voltage corresponding to the chrominance signal (when white balance is off) from the white balance detector circuit in the Process circuit board, and feeds it to the white balance indicator circuit in the electronic viewfinder when the white balance switch on the side of camera is set to the CHECK position.

Details

The DC voltage corresponding to the chrominance signal is supplied to the base of Q228 via terminal No. 8 of multi-pin connector CN303.

The white balance drive circuit works as follows;

When the white balance switch is set to the upper (normal) position, Q228 is turned OFF, Q229 is turned ON and approx. +7V obtained at the emitter of Q229 is supplied to the white balance indicator circuit in the electronic viewfinder through terminal No. 2 of CN204 regardless of the DC voltage to the base of Q228.

When the switch is set to the CHECK position, Q228 is turned ON, Q229 is turned OFF, and a DC voltage corresponding to the DC voltage at the base of Q228 is supplied from the collector of Q228 to the white balance indicator circuit in the viewfinder.

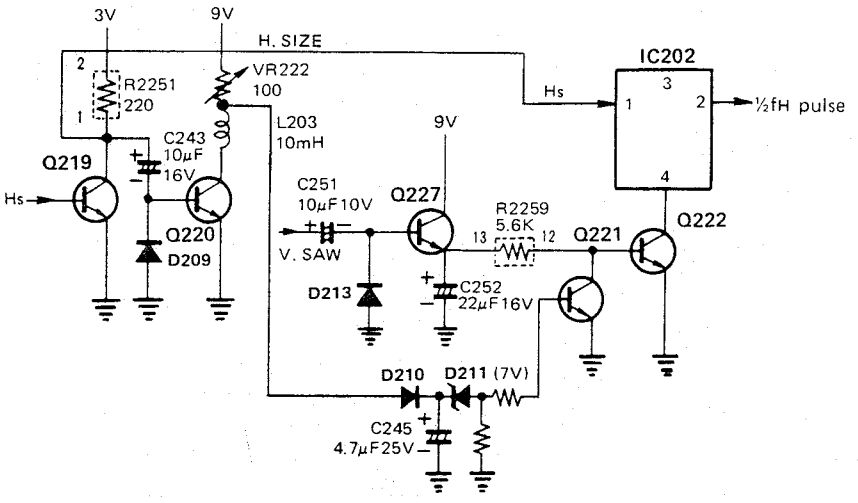

Fig. 36

3-17. Standby Circuit

Outline

When the recording outdoors, using camera and VCR, the power consumption of the batteries must be conserved as much as possible, which is the exact function of the stand by circuit.

Details

When the stand by switch is turned to the "ON" position, practically all circuits in the camera and the VCR are operational, that is, the power from +9V and +3V sources are supplied to all electric circuits in the Process, Deflection and Viewfinder boards in the camera and +12V is consumed in the VCR. In this case, the heater current (i_1) for the vidicon flows as shown in Fig. 37. The heater current (i_2) for the viewfinder is supplied by the +3V supply through transformer (T801) as shown in Fig. 37.

A grounded signal (0V) is routed to the VCR so that it also operates at practically full power.

When the stand by switch is turned to the "STAND BY" position, the current from +9V power supply flows only to the heater of vidicon tube and viewfinder tube in order to preheat them.

The VCR, in this case, receives a stand-by signal (+3V) to stop (stand by) the operation of itself.

Thus, the power consumption of the camera and VCR is conserved. (see Fig. 38).

Standby Switch "ON"

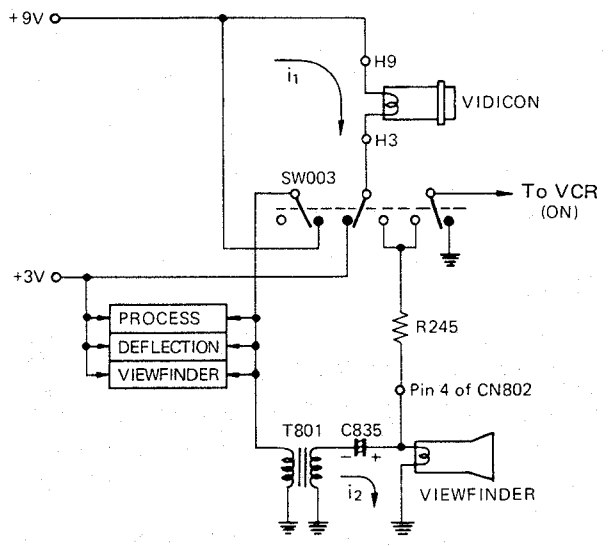

Fig. 37

Standby Switch "STAND BY"

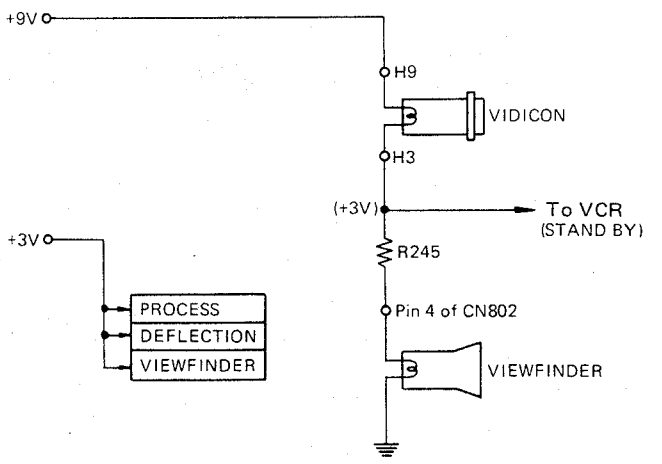

Fig. 38

4. Process Circuit Board (YWV3201EZK03)

The Process Circuit Board (YWV3201EZK03) consists of following circuits.

		Page
4-1.	Pulse Generator Circuit	24
4-2.	Bias Circuit	25
4-3.	AGC/Y Signal Generator Circuit	25
	4-3-1. Optical Black Clamp Circuit	27
4-4.	Luminance Signal Processing Circuit	28
	4-4-1. Y_H Signal Circuit	28
	4-4-2. Gamma Correction Circuit	29
	4-4-3. Y_L Signal Circuit	30
	4-4-4. Y (edge) Signal Circuit	31
	4-4-5. Y (sup) Signal Circuit	31
4-5.	Horizontal Aperture Signal Circuit	32
4-6.	Tracking Signal Generator Circuit	32
4-7.	Vertical Edge Generator Circuit	34
4-8.	Red and Blue Carrier Signal Separation Circuit	35
	4-8-1. Vertical Transient Spurious Correction Circuit	38
	4-8-2. Shading Correction Circuit	39
	4-8-3. Tracking Correction Circuit	39
4-9.	Blue Signal Detection Circuit	40
4-10.	Red Signal Detection Circuit	41
4-11.	Color Reproduction Correction Circuit	42
4-12.	Chrominance Signal Generator Circuit	42
4-13.	High Y Level Chroma Clip Circuit	43
4-14.	Low Level Chroma Suppression Circuit	44
4-15.	Chrominance/Burst Mix Circuit	45
4-16.	White Balance Detector Circuit	45
4-17.	Y/Chrominance Mix Circuit	46
4-18.	AIC Detection and AIC Start Delay Circuit	46
4-19.	PAL Out Circuit	48
4-20.	Playback Sense Circuit	49

4-1. Pulse Generator Circuit

Outline

This circuit generates all sync pulses used in the camera.

Details

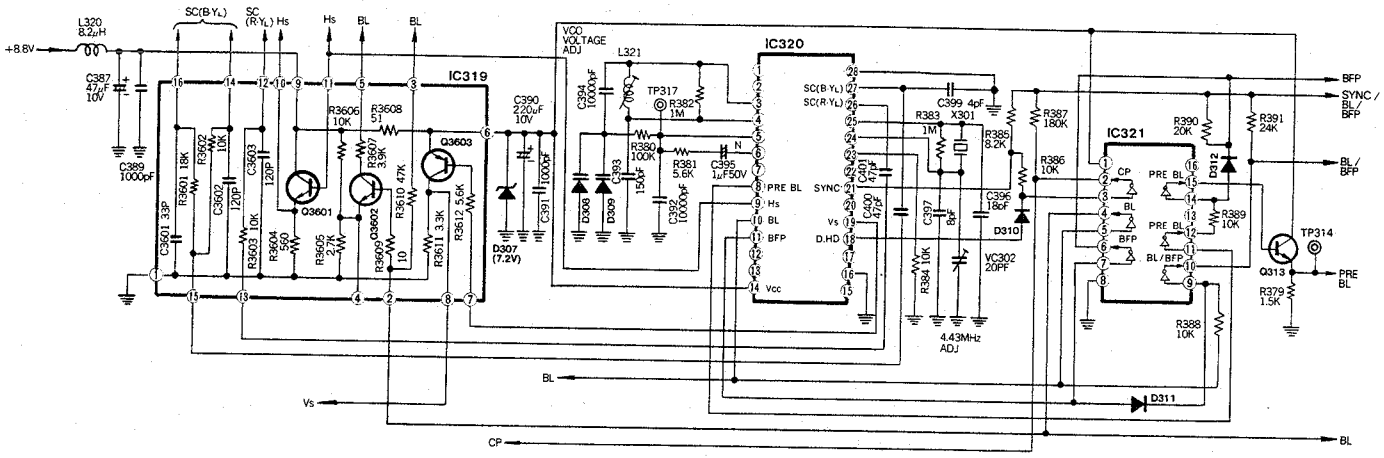

Fig. 39 Pulse Generator Circuit

The pulse generator circuit consists of a +7V regulator, 17.7MHz (4fsc: four times of PAL subcarrier frequency) crystal oscillator X301, sync generator IC320 and inverter IC321.

The +7.2V is generated by regulating +8.8V using zener diode D307 and supplied to IC320, IC321 and Q313 as a power source. The 17.7MHz frequency oscillated by the 17.7MHz crystal oscillator consisting of X301, VC302 (4.43MHz ADJ), R383, C396 and C397 is phase-compared in IC320 with the frequency fx generated by the voltage controlled oscillator (VCO), which is composed of R382, L321 (VCO VOLTAGE ADJ), C393, C394, D308 and D309 and connected to pins 3 and 4 of IC320. The phase detected output is sent from pin 5 of IC320 to variable capacitance diodes D308 and D309 in VCO to drive them and control the VCO frequency. This phase lock loop circuit always keeps an interleaving relationship among subcarrier, horizontal and vertical frequency generated by IC320.

VC302 (4.43MHz ADJ) is a control for adjusting 4 fsc. L321 (VCO VOLTAGE ADJ) adjusts a lock range of VCO.

The following pulses are generated from IC320:

Pin 8; Preblanking (Pre BL) Pulse
Pin 9; Horizontal Scanning Start (Hs) Pulse
Pin 10; Composite Blanking (BL) Pulse
Pin 11; Burst Flag Pulse (BFP)
Pin 18; Delayed Horizontal Drive (D. HD) Pulse
Pin 19; Vertical Scanning Start (Vs) Pulse
Pin 21; Composite Sync Pulse

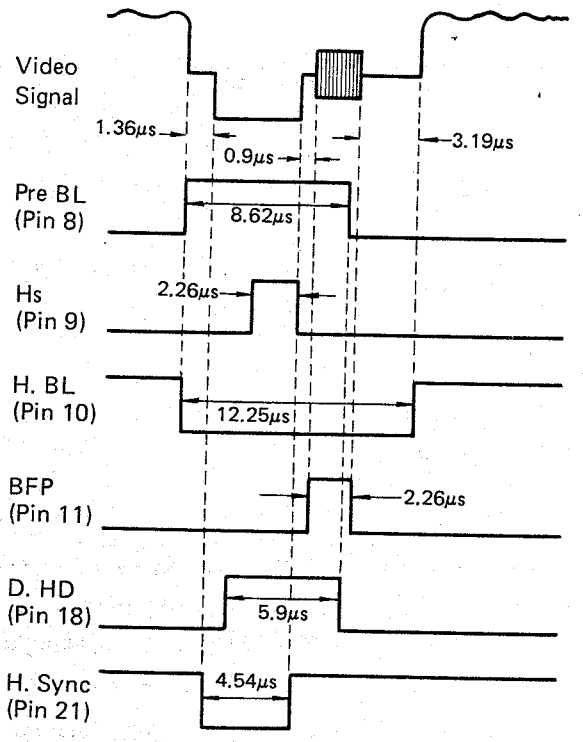

Fig. 40 Pulses-1

Pin 26; Subcarrier for R-YL Modulation
Pin 27; Subcarrier for B-YL Modulation
The relative correlations for each pulse are shown in Fig. 40.
The SC (R-YL) and SC (B-YL) are supplied to other circuits through integrators in IC319. The Hs and BL pulses are directly supplied to other circuits from IC320. The Hs pulse is also supplied to other circuit through buffer Q3601 in IC319 and the BL pulse through inverter in IC321 and BL switching Q3602 in IC319 respectively. The Vs pulse is applied to other circuit through inverter Q3603 in IC319 and the pre BL pulse through inverters in IC321 and buffer Q313. The BFP is supplied to other circuit through inverter in IC321. The BL pulse Ⓐ and BFP Ⓑ are mixed at pin 9 of IC321, and resultant pulse Ⓒ is fed to other circuit through inverter in IC321. The D. HD pulse Ⓓ and sync pulse Ⓔ are mixed at pin 3 of IC321 to generate a clamp pulse (CP) Ⓕ. The CP is supplied to other circuits through inverter in IC321. The pulse Ⓗ which is made by mixing the BL/BFP mixed pulse Ⓒ, sync pulse Ⓔ and BFP Ⓖ through R391, R385 and R390 is fed to other circuit.

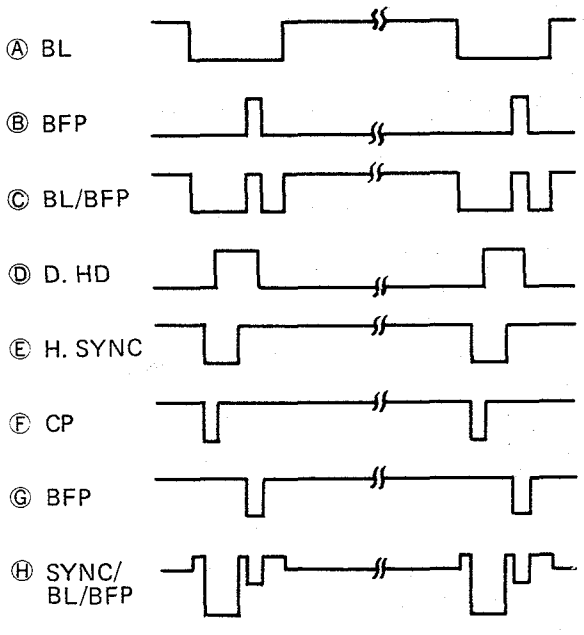

Fig. 41 Pulses-2

4-2. Bias Circuit

This circuit makes DC bias needed in other circuits such as gamma correction, low level clip, optical black clamp, etc. VR305 (R PEDESTAL) sets the pedestal of RED signal and VR306 (Y_L PEDESTAL) sets the pedestal of Y_L signal.

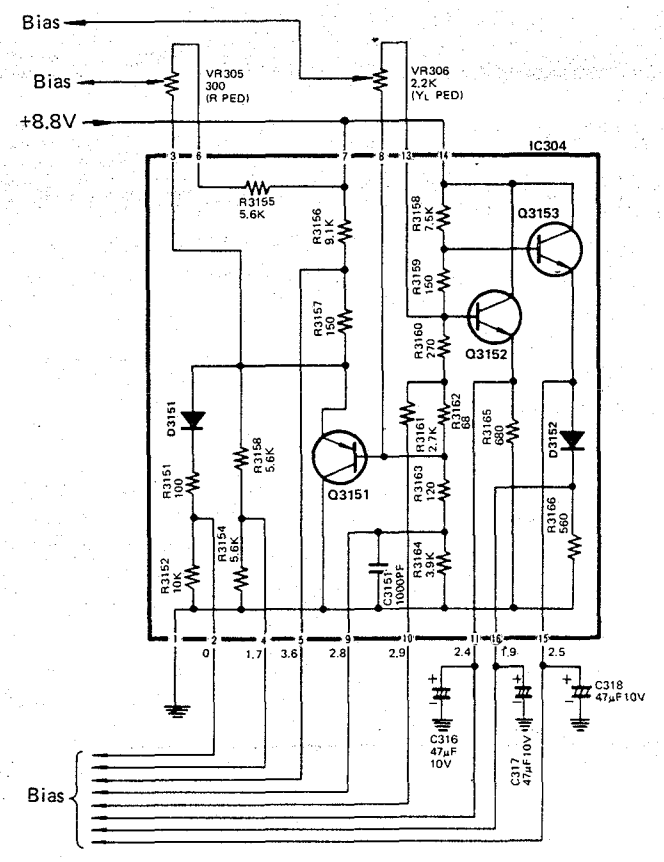

Fig. 42 Bias Circuit

4-3. AGC/Y Signal Generator Circuit

Outline
This circuit amplifies the preamplifier output signal provided and generates the luminance (Y) signal whose level is maintained constant by automatically controlling the gain of the amplifier. The automatic gain control (AGC) circuit starts to operate only when the lens iris is fully open.

Details
The output signal of the Preamplifier circuit board (YWV3201EZK01) goes to terminal No. 1 of the multi-pin connector CN301.
After its level is set by VR301 (INPUT GAIN), it goes to pin No. 14 of IC301. The signal at pin No. 14 of IC301 is amplified by amplifier Q3001 and the output signal is derived from the collector of Q3001.
The preblanking (Pre BL) pulse is introduced from pin No. 2 of buffer IC321 into the base of Q3001 through VR302 (OB OFFSET) and into pin No. 13 of IC301 and also into the emitter of Q3001 through pin No. 15 of IC301.

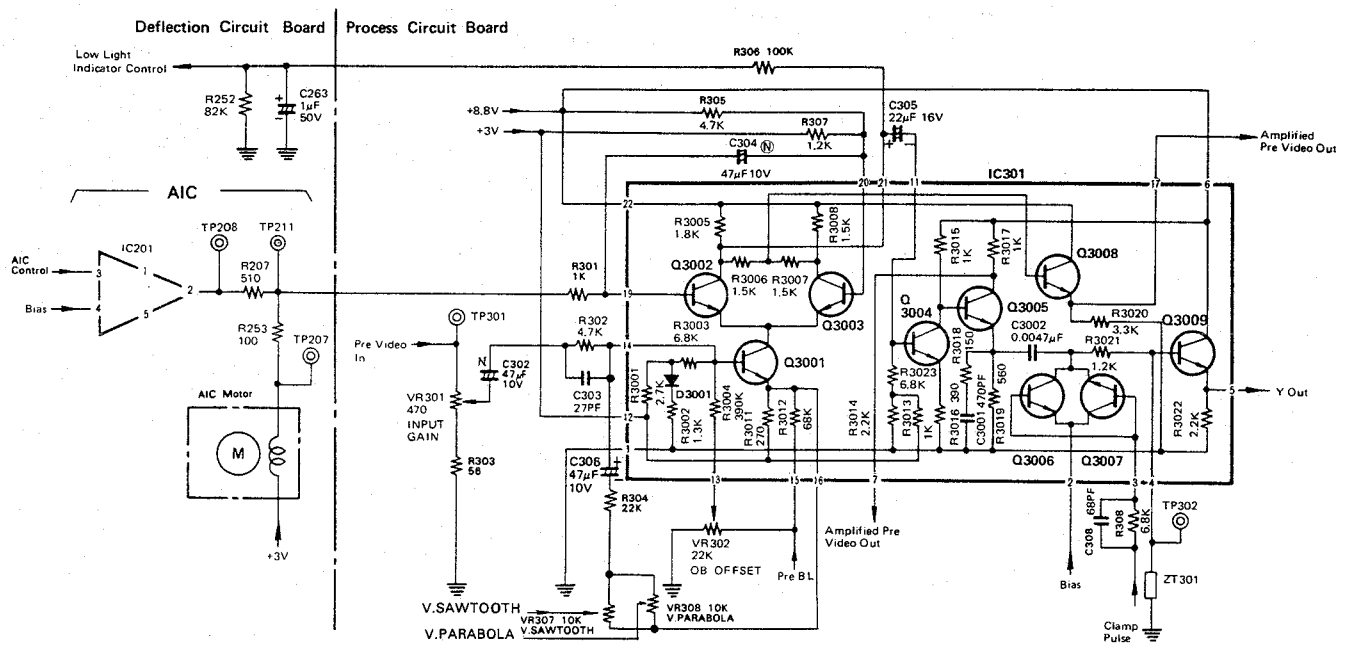

Fig. 43 AGC/Y Signal Generator Circuit

The preblanking Ⓐ supplied to the emitter of Q3001 is not inverted and is obtained at the collector. The preblanking pulse Ⓐ supplied to the base of Q3001 via VR302 is inverted and also appears at the collector. The inverted preblanking pulse Ⓑ is mixed at the collector with the non-inverted preblanking pulse Ⓒ, and the preblanking pulse Ⓓ is made.

The pick-up tube sends out current corresponding to the incoming light intensity, but even when no light whatsoever reaches the target output current called dark current exists. The dark current of the vidicon is relatively large and varies depending upon the temperature of the vidicon. In a TV camera using a vidicon, the black level of the output signal is generally unstable due to temperature variations. Accordingly, this color camera uses a metallic stripe (optical black) in front of the vidicon photoconductive layer to cut off the incoming light at the end of the horizontal period. The optical black causes only the dark current to be detected which is clamped at a specific potential to suppress black level variations. (Refer to Optical black clamp circuit on page 27.) There is a level difference between the dark current detected from the optical black region and the actual dark current from active area of the tube.

The preblanking pulse Ⓓ made by mixing the preblanking pulses Ⓑ and Ⓒ is mixed with the amplified pre-video out signal Ⓔ which has the difference between dark current levels. Thus the difference in dark current is canceled, and the amplified pre-video out signal Ⓕ is obtained.

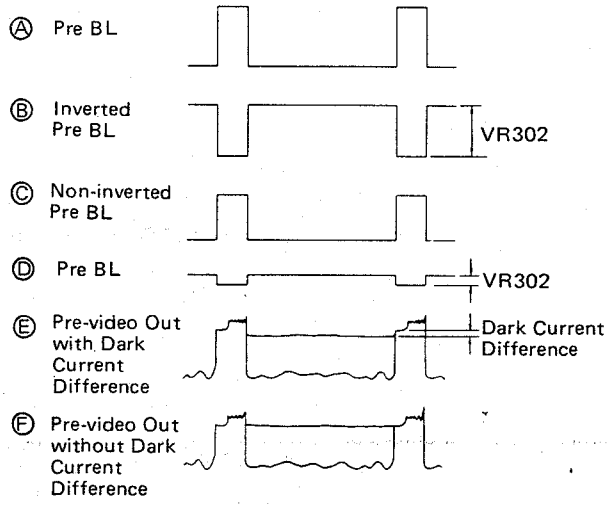

Fig. 44-1 Optical Black (OB) Offset

There is a dark shading difference (Ⓖ) between the dark current from the optical black region and from active area of tube in vertical (V) rate. The V. sawtooth and parabola signals are supplied from the deflection circuit board through terminal No. 2 and No. 5 of CN305 to blanking gate Q307 and D301, where the V. waveforms during the preblanking period (H. rate) are removed by the preblanking pulse supplied to Q307 and D301. These waveforms are fed through VR307 (V. SAWTOOTH) and VR308 (V. PARABOLA) to the base and emitter of Q3001 as in the case of the OB offset. The correction signal Ⓗ obtained at the collector of Q3001 by adjusting VR307 and VR308 is mixed with the pre-video signal Ⓖ , and the dark shading from the active area becomes same as that from the optical black region (Ⓘ). After the signal Ⓘ undergoes the optical black clamp, the V. dark shading is corrected automatically (Ⓙ).

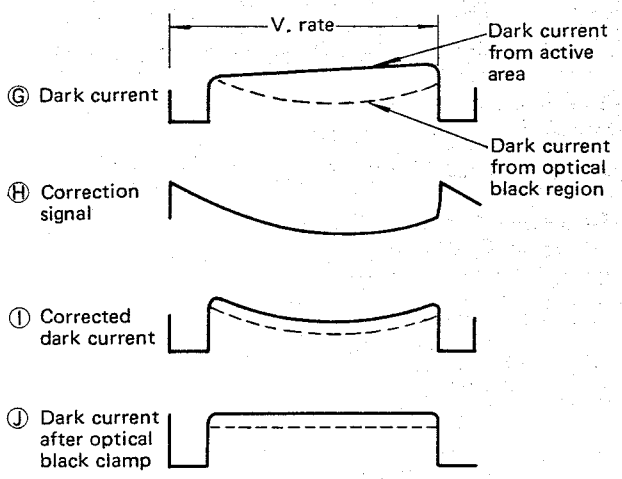

Fig. 44-2 Vertical Dark Shading Correction

The amplified signal is then fed to the automatic gain control (AGC) circuit consisting of Q3002 and Q3003 in IC301.

The DC voltage which is supplied to automatic iris mechanism to control iris opening is also supplied via terminal No. 3 of CN305 to the base of Q3002 from the auto iris control (AIC) circuit in the Deflection circuit board. In order to open the iris, the iris control DC voltage must be increased.

When the auto iris mechanism works properly, the relatively low DC voltage is supplied to the base of Q3002, and Q3002 is turned OFF. Therefore, Q3003 becomes a fixed gain amplifier. The amplified signal whose level is fixed by voltage division at the collector of Q3003 (R3005-R3007) and that obtained at the junction point of R3005 and R3006 is fed to amplifier Q3004 through C305. When the camera is pointed at a weakly illuminated scene, the auto iris control circuit increases the iris control voltage to open the lens iris.

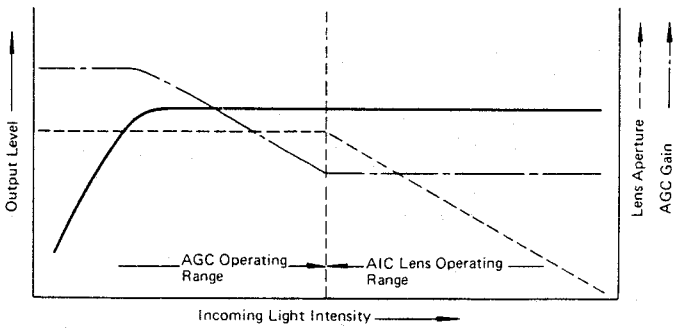

Fig. 45 AGC operation

However, the lens iris becomes fully open at a certain iris control voltage and cannot be opened any more even when the DC voltage is increased. When the lens iris is wide open by the increased DC voltage, Q3002 is turned ON at this time. Therefore, Q3002 and Q3003 assume a differential amplifier configuration, whose gain is automatically controlled by the DC voltage supplied to Q3002 to keep the signal level constant.

In this way, the signal level corresponding to normal and relatively high illumination is kept constant by the lens opening while the signal level corresponding to relatively low illumination is controlled by the AGC circuit.

The amplified signal which contains the modulated red/blue and the green signals, obtained at the collector of Q3002 is then fed through C305, amplifier Q3004 and amplifier/buffer Q3005 to optical black clamp circuit consisting of Q3006 and Q3007, where the optical black level of the amplified signal is clamped. (The Optical black clamp circuit will be described later.) After the optical black clamp, the 3.58MHz modulated component on the signal is removed by a 3.58MHz ceramic trap ZT301 connected to the base of buffer Q3009 and the luminance (Y) signal is obtained.

The Y signal is supplied to the luminance signal processing circuit via Q3009. The amplified signal obtained at the collector of Q3005 is fed to the 3.58MHz band pass filter (B.P.F.) which detects the modulated red/blue signal. The collector voltage of Q3002 is supplied to the Deflection circuit board via R306 and terminal No. 6 of CN305 to drive the low light indicator in the electronic viewfinder. The signal obtained at the junction point of R3006 and R3007 connected between collector of Q3002 and Q3003 is supplied to the tracking signal generator via buffer Q3008.

4-3-1. Optical Black Clamp Circuit

Outline

The pick-up tube sends an output current corresponding to the incoming light intensity, but even when no light reaches the target, an output current called dark current is obtained.

The dark current of the vidicon is relatively large and varies with the temperature of the vidicon. In a TV camera using a vidicon, the dark level of the output signal is extremely unstable with respect to changing temperature.

In a color camera using the single carrier frequency multiplexing system, the red (R) and blue (B) signals modulated at 3.58MHz are riding on the top of the green (G) signal. Thus the black level of the R and B signals are free from temperature variations because they are independent of vidicon dark current. However, the black level of the Y signal which is obtained by removing the modulated R and B components from the vidicon output increases or decreases according to temperature variations. Therefore, the black level balance between the Y_L and R signals, and between Y_L and B signals are lost due to a temperature variations and this causes a change in color reproduction.

Details

The black level variation is corrected as follows.

A metallic stripe (optical black) for cutting the incoming light at the end of the horizontal scan period is built into the vidicon faceplate.

When the beam scans the optical black portion (Ⓖ), the dark current of the vidicon is produced and this signal portion is clamped to a fixed DC potential, so that the black level variation due to a change of dark current is sensed.

In other words, the dark current level Ⓗ' of the amplified pre-video output signal supplied to the junction point of C3002 and R3021 is clamped by the clamp pulse (CP)Ⓘ(Ⓘ') supplied to the base of Q3006 and fixed to the emitter potential of Q3006.

Therefore, even if the dark current level drifts due to the temperature variations, the DC potential of the optical black (OB) level is held constant. The clamp potential of the OB level is determined by the bias voltage supplied to pin No. 2 of IC301. Q3007 prevents the mis-clamping of Q3006 when the video signal bounces due to extreme changing of the light intensity.

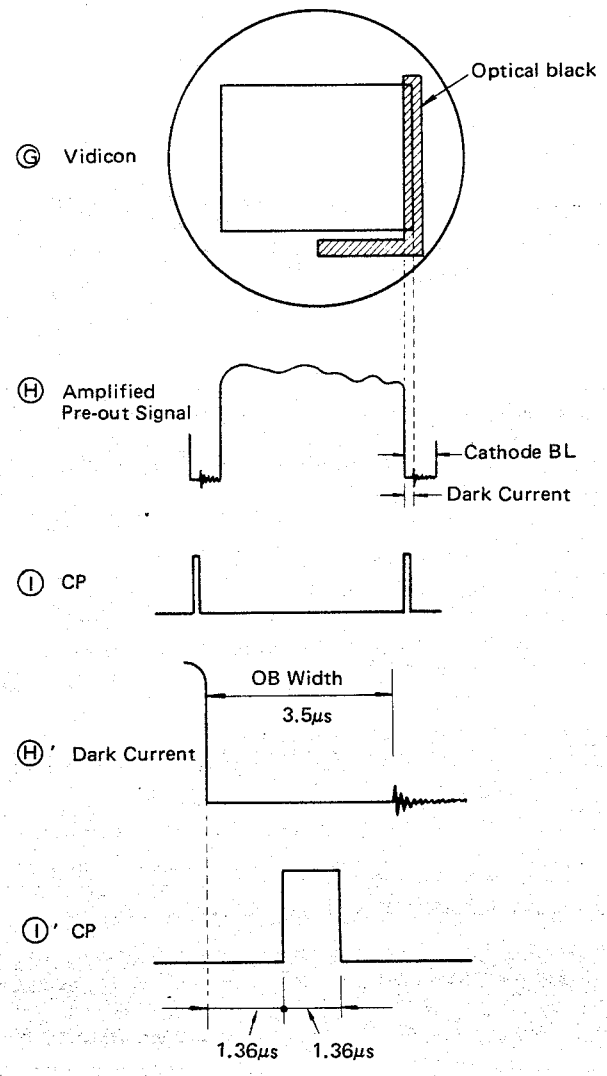

Fig. 46 Optical Black Clamp

4-4. Luminance Signal Processing Circuit

This circuit contains the Y_H signal circuit, Y_L signal circuit, Y (edge) signal circuit and Y (sup) signal circuit.

4-4-1. Y_H Signal Circuit

Outline

This circuit receives the luminance (Y) signal from the AGC/Y signal generator circuit and generates the luminance (Y_H) signal having high frequency response characteristic.

Details

The Y signal Ⓐ at the emitter of buffer Q3009 in the AGC/Y signal generator circuit is applied to the collector of Q3052 through pin No. 5 of IC302, and the preblanking pulse Ⓑ is supplied to the base of Q3052 from buffer Q313 in the pulse generator circuit through pin No. 3 of IC302.

Q3052 is turned ON during the preblanking duration and the preblanking pulse is mixed with the Y signal (Ⓒ)

The Y signal mixed with the preblanking pulse then goes to the gamma correction circuit consisting of Q3053 and Q3054 in IC302.

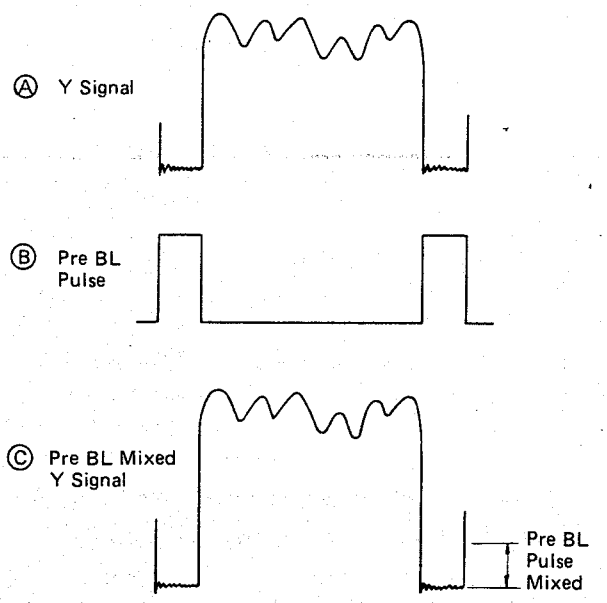

Fig. 47 Preblanking Mix

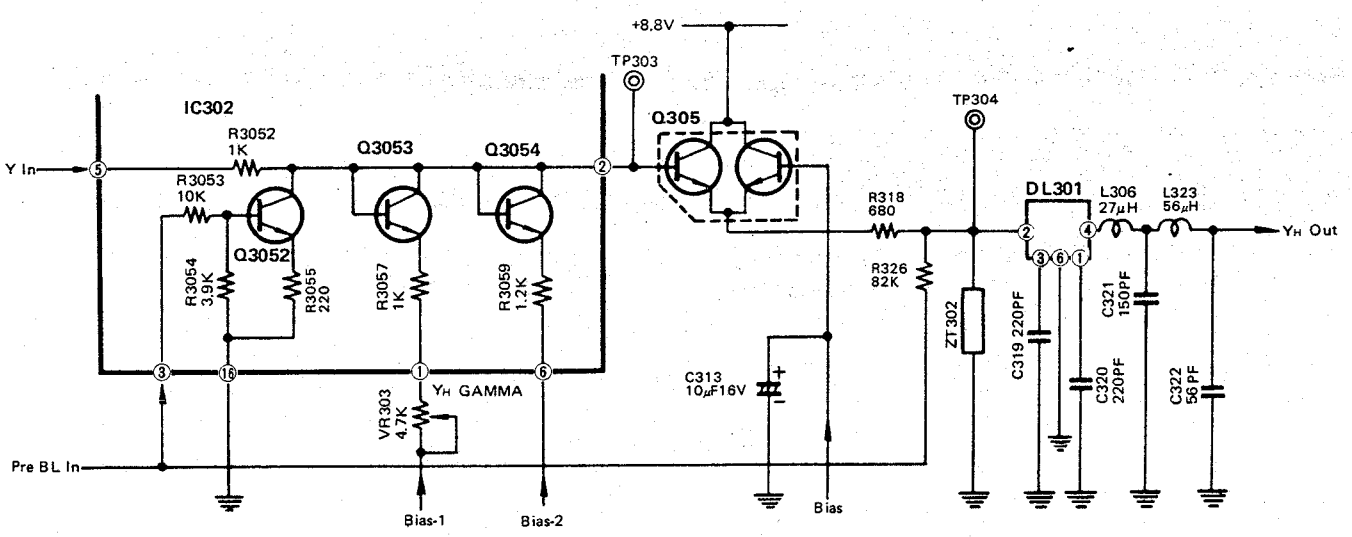

Fig. 48 Y_H Signal Circuit

4-4-2. Gamma Correction Circuit

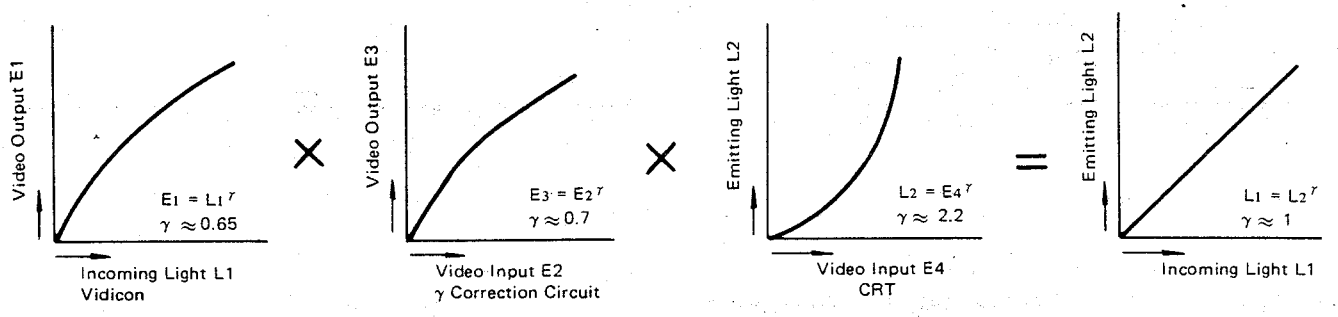

Fig. 49 Gamma correction

Outline

This circuit matches the non-linearity of vidicon's photoelectric conversion characteristic to that of cathode ray tube (CRT) and reproduces a linear picture of high fidelity on the monitor.

In order for a televised picture to have the same contrast gradation as the original scene, the system (including the pickup tube, signal processing inside camera and monitor, and CRT) gamma must be equal to 1.

The gamma characteristic of vidicon is approx. 0.65 and the gamma characteristic of the monitor CRT is approx. 2.2, so that the gamma characteristic of the gamma correction circuit should be approx. 0.7, which makes the total gamma to be approx. 1.0 as shown in Fig. 49.

Details

Bias between the base and emitter of Q3053 in IC302 is set by a DC voltage supplied from emitter of Q3152 in the bias circuit IC304, and the gamma characteristic of the relatively low level portion of the Y signal is set by controlling the current flowing to Q3053 with VR303 (Y_H GAMMA).

The DC voltage from Q3152 sets the suppression level of the Y signal and VR303 sets the extent of suppression. Similarly, bias between the base and emitter of Q3054 is set by a DC voltage supplied from Q3153 in IC304, and the gamma characteristic of the relatively high level portion of the Y signal is determined by the current flowing to Q3054 through R3059.

The DC voltage from Q3153 sets the suppression level and R3059 sets the extent of suppression of the Y signal.

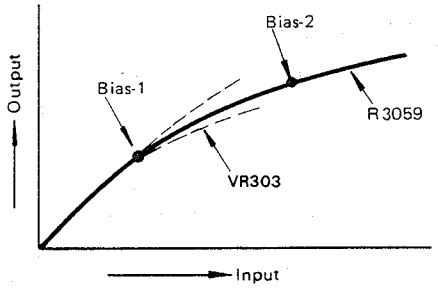

Fig. 50 Gamma correction of high level portion

The Y signal Ⓓ which undergoes gamma correction is supplied to the low level clip circuit Q305 from pin No. 2 of IC302 (See Fig. 51).

The low level preblanking portion of the signal below the base potential of Q305, set by bias circuit IC304, is clipped by Q305 since the left side transistor in Q305 is turned OFF by the Y signal below the base potential of the right side transistor.

The clip level is determined by the bias supplied to the base of Q304 from the junction point of R3160 and R3162 in IC304.

The signal Ⓔ whose lower level is clipped and which appears at the emitter of Q305 is mixed with the preblanking pulse Ⓕ by using a resistance mixer consisting of R318 and R326, thus determining the pedestal level of the Y signal Ⓖ.

The Y signal whose pedestal level is set is supplied to a 2.8MHz low pass filter consisting of DL301, L306, L323 and C319-322, where the frequency response of Y signal is limited to 2.8MHz and its phase is delayed to match the chrominance signal.

ZT302 is a 3.58MHz trap, which removes any remaining 3.58MHz R and B modulated components. The Y signal whose bandwidth is 2.8 MHz is supplied to pin No. 2 of IC305 as a luminance (Y_H) signal having high frequency response characteristic.

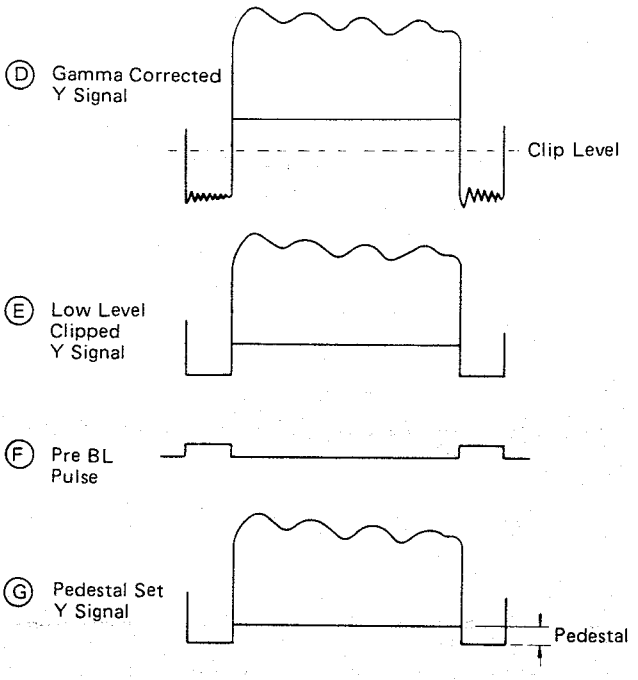

Fig. 51 Pedestal set

4-4-3. Y_L Signal Circuit

Outline

This circuit receives the luminance (Y) signal from AGC/Y signal generator circuit as in the case of Y_H signal circuit, and generates the luminance (Y_L) signal having low frequency response characteristic.

Details

The Y signal is supplied to the collector of Q3051 through pin No. 5 of IC302, and a preblanking pulse is supplied to the base of Q3051 from the pulse generator circuit through pin No. 3 of IC302. Q3051 is turned ON during the preblanking duration and the preblanking pulse is mixed with the Y signal as in the case of Y_H signal circuit. The Y signal mixed with the preblanking pulse is then supplied to a gamma correction circuit Q3058 in IC302. Bias between the base and emitter of Q3058 in IC302 is set by a DC voltage supplied from emitter of Q3153 in the bias circuit IC304, and the gamma characteristic of the relatively high level portion of the Y signal is determined by the current flowing to Q3058 through R3058.

The DC voltage from Q3153 sets the suppression level and R3058 sets the extent of suppression of the Y signal.

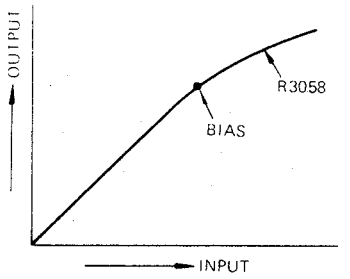

Fig. 52 Gamma Characteristic of High Level Portion

The Y signal Ⓗ mixed with the preblanking pulse at Q3051 and gamma corrected by Q3058 is sent to the low level clip circuit Q3055 to Q3057, where the Y signal's low level (preblanking) portion below the base potential of Q3056 is clipped since Q3055 is turned OFF by the Y signal which is below the base potential of Q3056. In this way, the pedestal level of the Y signal is desired (Ⓘ).

The clip level (pedestal level) is set by the base potential of Q3056 which is adjusted by VR306 (YL PEDESTAL).

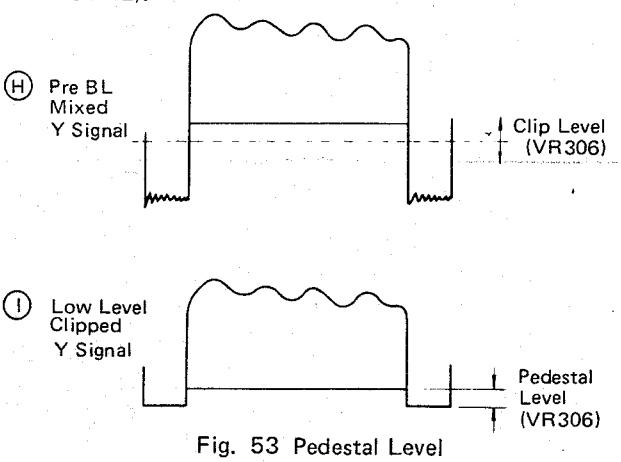

Fig. 53 Pedestal Level

The clipped portion of Y signal is suppressed by the non-linear characteristic of emitter current I_{CE} of Q3056 as shown below.

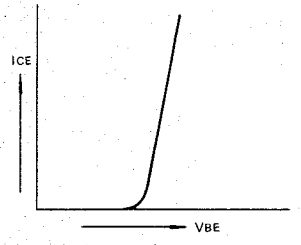

Fig. 54 I_{CE}/V_{BE} Characteristic

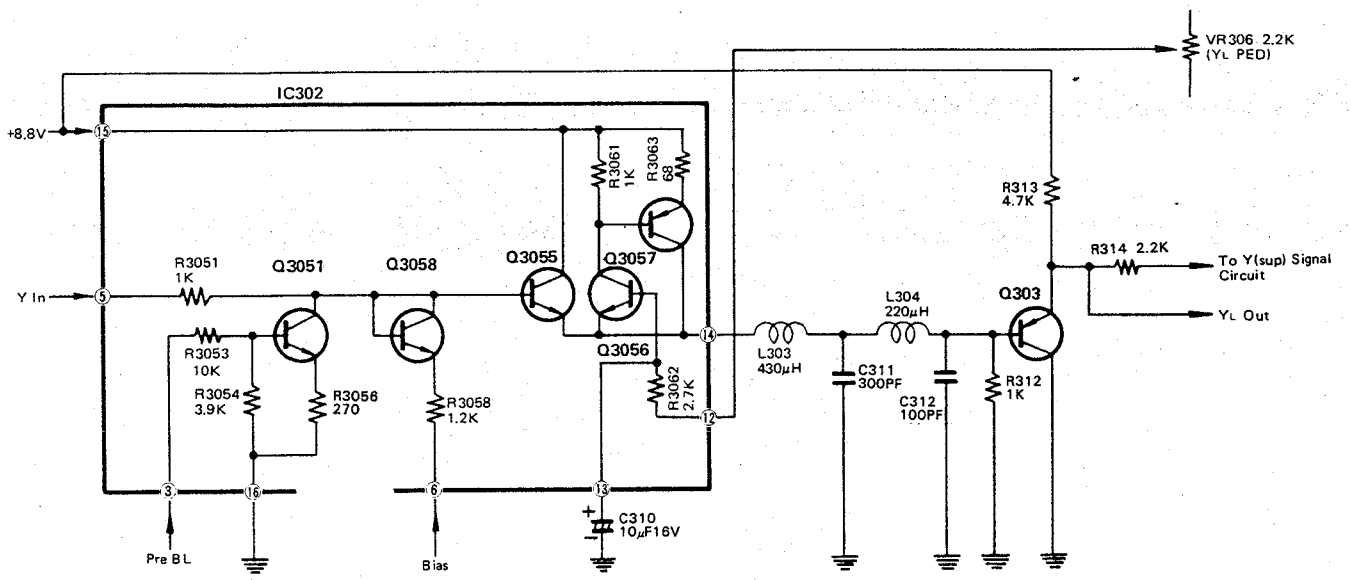

Fig. 55 Y_L Signal Circuit

However, since the emitter voltage of Q3055 (See Fig. 53) decreases at the clipped portion of Y signal, Q3056 also turns ON, and the current flowing through Q3056 is fed back negatively to the emitter of Q3055 via Q3057 to increase the emitter voltage to turn OFF Q3055.
In this way, when the clipped portion of Y signal is starting to get suppressed, the emitter voltage of Q3055 is increased to turn OFF Q3055 and to clip the low level of the Y signal without suppression. The Y signal whose pedestal level is set is supplied via pin No. 14 of IC302 to the 0.5MHz low pass filter consisting of L303, L304, C311 and C312, where the frequency response of Y signal is limited to 0.5MHz. The Y signal of which bandwidth is 0.5MHz is supplied via buffer Q303 to pin No. 12 of IC315 as a luminance (Y_L) signal having low frequency response characteristic.

4-4-4. Y (edge) Signal Circuit

Outline

This circuit generates the luminance [Y (edge)] signal for making the vertical edge signal.

Details

The Y signal obtained at the emitter of Q305 low level clip circuit is supplied through R310 to the white suppress circuit Q301, where the high level of Y signal is suppressed and the luminance signal for making the vertical edge signal is obtained. (Fig. 56).
This signal is supplied as Y (edge) signal to pin No. 1 of IC316 through buffer Q302 and VR323 (V. EDGE BALANCE).

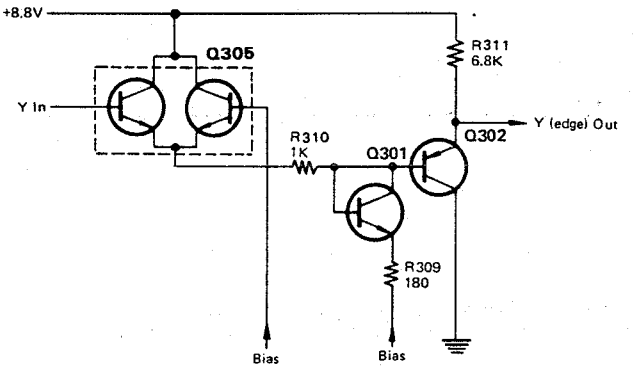

Fig. 56 Y (edge) Signal Circuit

4-4-5. Y (sup) Signal Circuit

Outline

This circuit generates the luminance [Y (sup)] signal for suppressing the low level chrominance signal.

Details

The Y signal obtained at the emitter of buffer Q303 is supplied through R314 to the white suppress circuit Q304, where the high level of Y signal is suppressed, and the luminance signal for suppressing the low level chrominance signal is obtained. (Fig. 57).
This signal is supplied as Y (sup) signal to pin No. 11 of IC310.

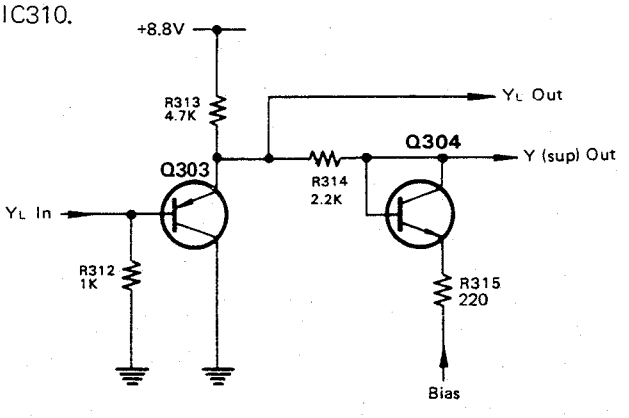

Fig. 57 Y (sup) Signal Circuit

4-5. Horizontal Aperture Signal Circuit

Outline

This circuit generates the horizontal edge (aperture) signal to enhance the horizontal resolution.

Details

The luminance (Y_H) signal having high frequency response is supplied to the base of Q3204 through buffer Q3205 inside IC305. When the camera is pointed at an object Ⓐ, for example, the Y_H signal Ⓑ is supplied to the base of Q3204. At this time, signal Ⓒ, passed through R3209 and R3205, signal Ⓓ, delayed 0.2μs by delay line DL302, and signal Ⓔ, which results from the delayed Y_H signal being reflected back through DL302 and delayed again (0.4μs) appear at the collector of Q3202, where they are mixed in fixed proportions to make up the H aperture signal Ⓕ. (See Fig. 59).

The H aperture signal obtained in this way is supplied through buffer Q3201 to the emitter of Q3302 in the low level chroma suppression circuit IC310.

The Y_H signal delayed by DL302 is supplied to the base of Q3252 in the Y/chroma mix circuit.

CL301 is a 3.58MHz trap for removing any 3.58MHz modulated components.

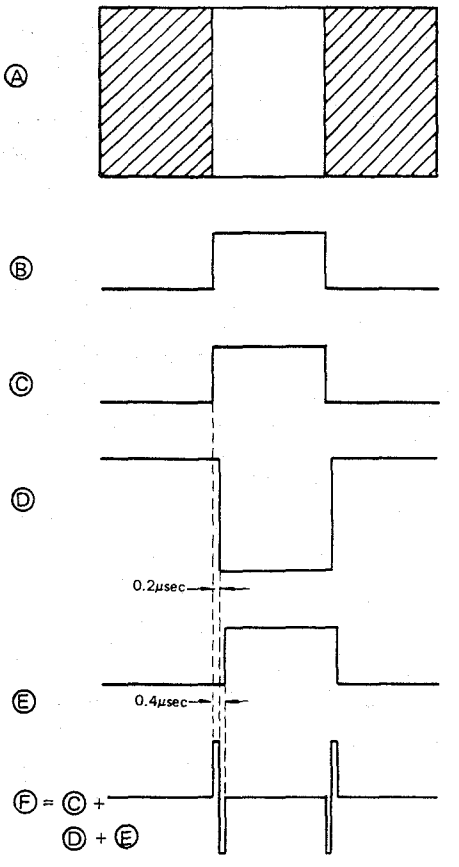

Fig. 59 Horizontal Aperture Signal

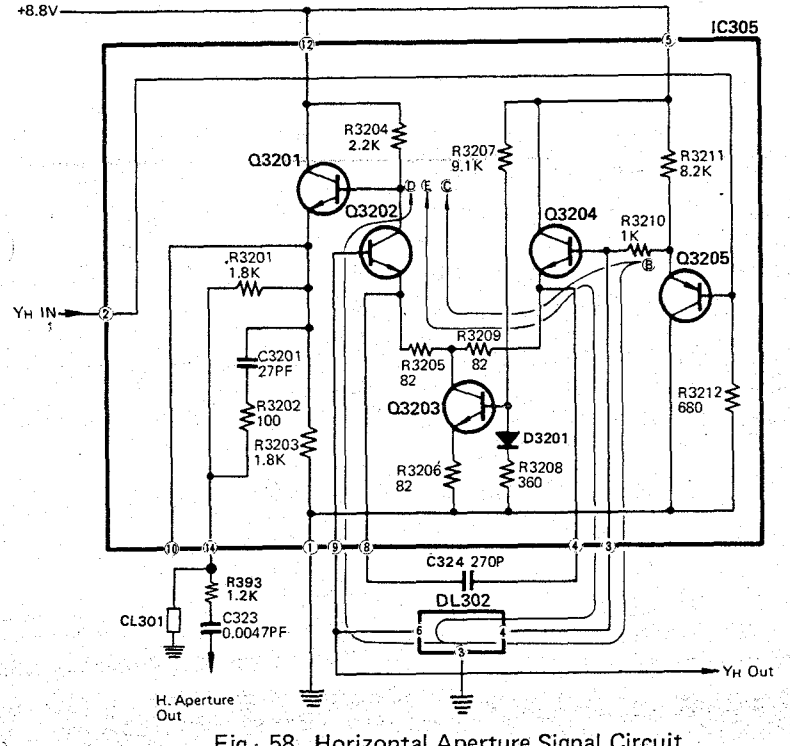

Fig. 58 Horizontal Aperture Signal Circuit

4-6. Tracking Signal Generator Circuit

Outline

The photoelectric conversion characteristic of the vidicon is not linear. The relatively high level of video signal from the vidicon undergoes greater suppression than that corresponding to dark picture part. (Fig. 60).

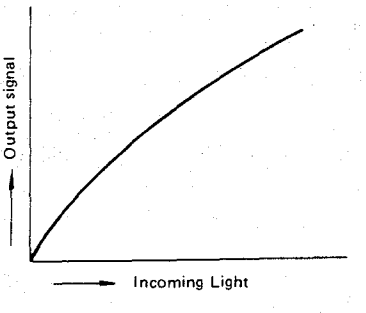

Fig. 60 Vidicon's Gamma Characteristic-1

In this color camera, the red (R) and blue (B) signals modulated at 3.58MHz are riding on top of the green (G) signal when they are extracted from the vidicon. So, signal's high level Ⓐ i.e., the modulated R and B component, is suppressed.

Therefore, the relatively high level of the modulated R(Rc) and modulated B(Bc) signals Ⓑ are also suppressed. (Fig. 61).

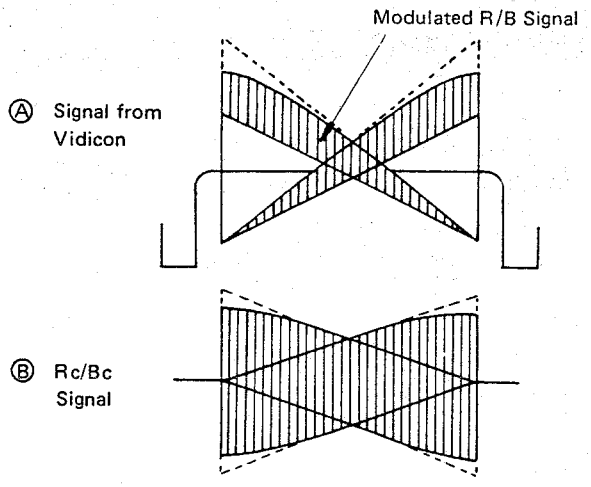

Fig. 61 Vidicon's Gamma Characteristic-2

As a result, the R and B signals obtained by detecting the Rc and Bc signals are suppressed more than Y_L signal obtained by removing the 3.58MHz modulated component. (The gamma characteristic of the R and B signals differ from that of Y_L signal).

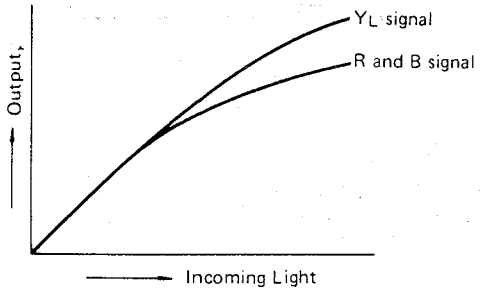

Fig. 62 Vidicon's Gamma Characteristic-3

This circuit generates the tracking signals for correcting the gamma characterstic of the R and B signals, and matching them with the Y_L signal.

Details

The negative amplified pre-video out signal Ⓒ (which contains the modulated red and blue signals as well as the green signal) obtained at the emitter of Q3008 inside IC301 is supplied to clamp circuit Q306. The blanking level of signal Ⓒ is clamped by the clamp pulse (CP) supplied to the base of Q306 from pin No. 2 of IC321. The clamp level is set by the emitter voltage supplied from the bias circuit IC304. The clamped signal is then supplied to the low pass filter consisting of L305 and C3101 in IC303, where the 3.58MHz modulated component is removed and luminance (Y) signal Ⓓ is made. The Y signal Ⓓ is supplied to the differential amplifier consisting of Q3101 and Q3102 inside IC303, where the positive Y signal Ⓔ and negative Y signal Ⓕ are obtained at the collector of Q3101 and Q3201 respectively.

The positive Y signal Ⓔ is then supplied to the high level clip circuit consisting of Q3103 and Q3104, where the signal exceeding the base potential of Q3104 is clipped. The clipped signal Ⓖ obtained at the collector of Q3103 is fed via pin No. 6 of IC303 to the center arm of VR312 (R TRACKING-1) and VR313 (B TRACKING-1) as a tracking signal-1 which corrects the relatively low level of R and B signals.

The negative Y signal Ⓕ is supplied to the high level clip circuit consisting of Q3104 and Q3106, where the signal exceeding the base potential of Q3104 is clipped. The clipped signal Ⓗ obtained at the collector of Q3106 is supplied via pin No. 4 of IC303 to the center arm of VR311 (R TRACKING-2) and VR314 (B TRACKING-2) as a tracking signal-2 which corrects the relatively higher portion of R and B signals. The negative Y signal Ⓕ is also supplied via VR304 (TRACKING-3 SET) to the high level clip circuit consisting of Q3104 and Q3107, where the signal exceeding the base potential of Q3104 is clipped. The clipped level is adjusted by VR304. The clipped signal Ⓘ obtained at collector of Q3107 is supplied via pin No. 2 of IC303 to VR310 (R TRACKING-3) and VR315 (B TRACKING-3) as a tracking signal-3 which corrects the high level of R and B signals. Q3105 is a DC regulator for Q3104.

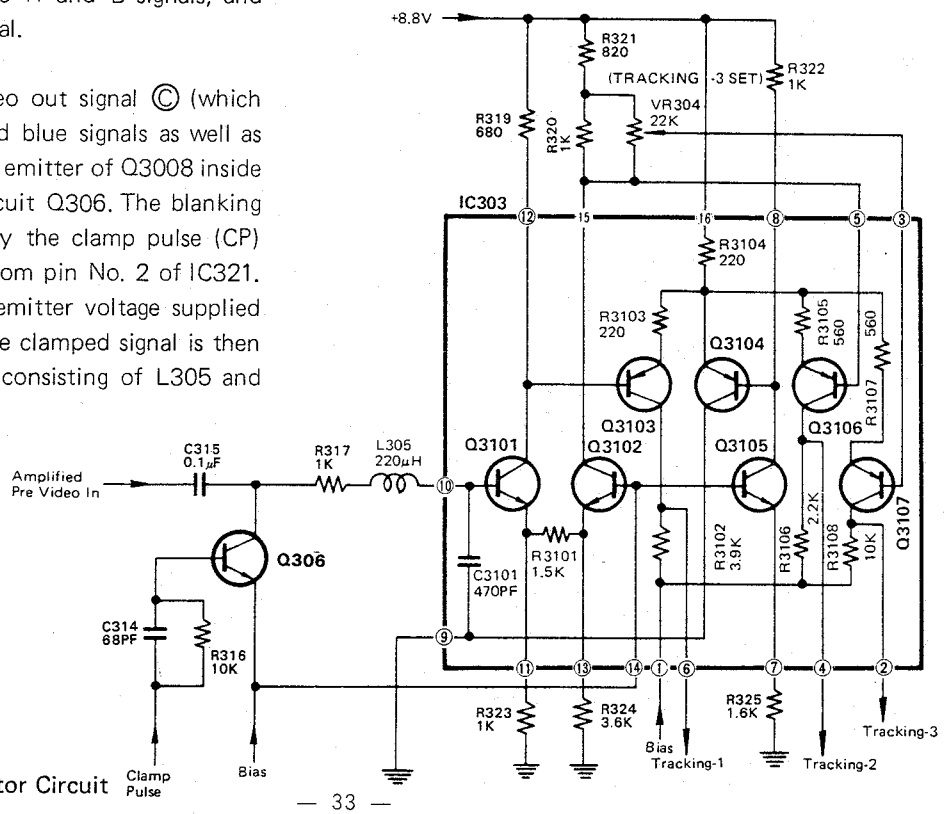

Fig. 63 Tracking Signal Generator Circuit

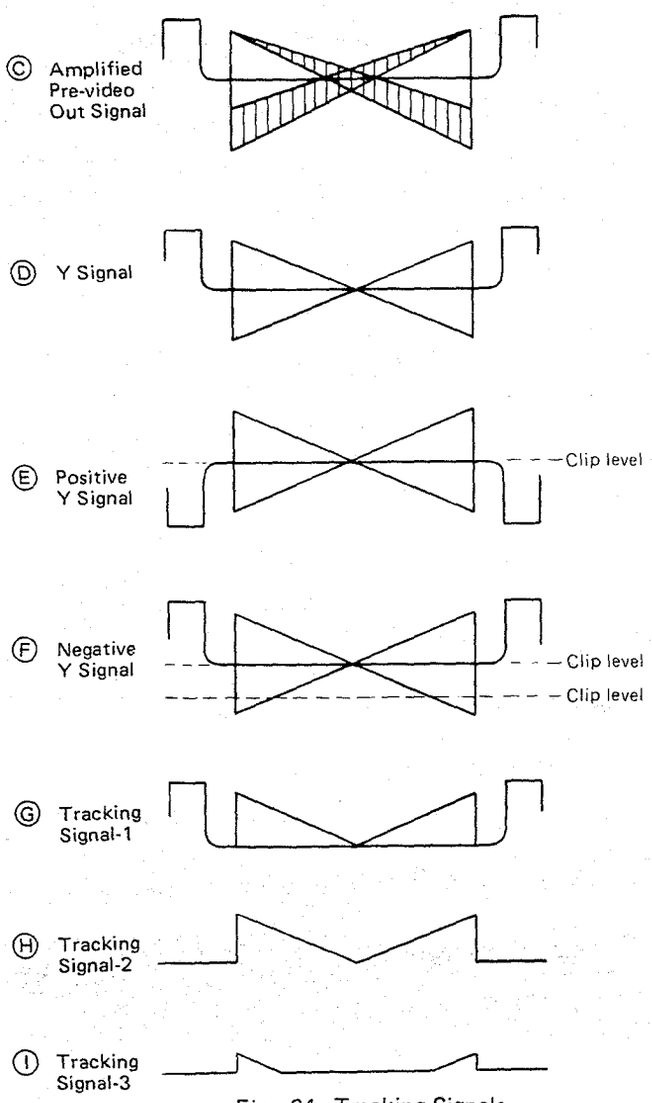

Fig. 64 Tracking Signals

4-7. Vertical Edge Generator Circuit

Outline

This circuit generates a vertical edge signal for increasing the vertical resolution by enhancing vertical contrast.

Details

The luminance [Y (edge)] signal for making the vertical edge signal supplied from the emitter of Q302 is applied to pin No. 1 of the modulator IC316 via VR323 (V EDGE BALANCE). This Y (edge) signal modulates the subcarrier which is applied to pin No. 3 of IC316 from pin No. 27 of IC320 via IC319.

The modulated signal from pin No. 7 of IC316 is sent to the glass delay line DL304 which delays the input signal by 1H line.

The 1H-delayed modulated signal is detected by the full-wave detector circuit consisting of T304, Q3501 and Q3502 in IC317.

The delayed Y (edge) signal Ⓑ from the emitter of Q3501 and Q3502 is applied to the emitter of Q3503, where it is mixed with the undelayed Y (edge) signal Ⓐ applied to the base of Q3503 to form a vertical edge signal Ⓒ at the collector. The vertical edge signal is sent to the low pass filter (L.P.F.) consisting of C3502, L319 and C3503, where the 4.43MHz and its harmonics are removed.

The vertical edge signal from the low pass filter is sent via the output amplifier Q3504-Q3506 to the vertical transient spurious correction circuit, and to pin No. 11 of IC306 where it is mixed with the chrominance signal.

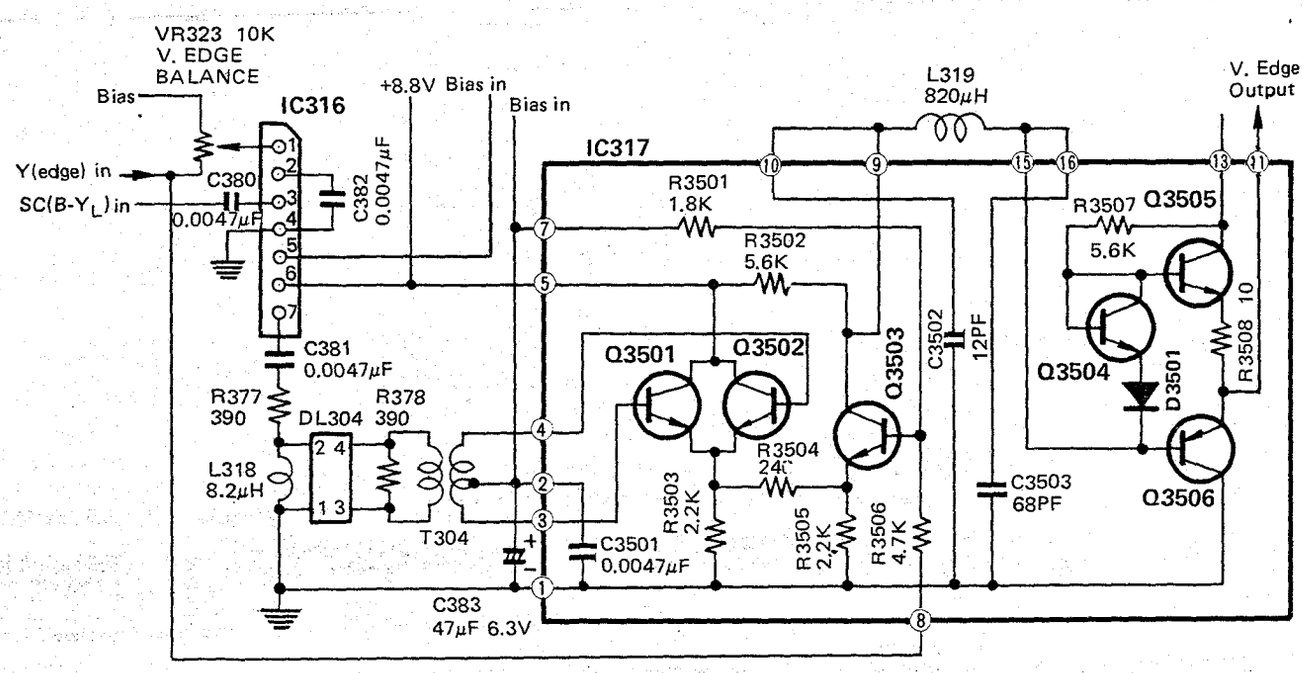

Fig. 65 Vertical Edge Generator Circuit

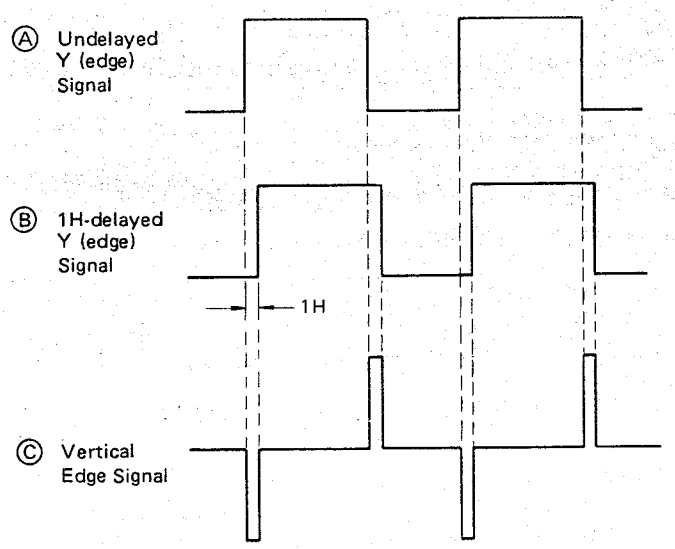

Fig. 66 Vertical Edge Signal

4-8. Red and Blue Carrier Signal Separation Circuit

Outline

This circuit takes out the modulated red (Rc) and blue (Bc) signals from the combined preamplifier output signal which is composed of a green (G) signal mixed with 3.58MHz modulated red (Rc) and blue (Bc) signals. Also the separated Rc and Bc signals undergo the shading and tracking correction in this circuit.

Details

The amplified negative pre-video out signal Ⓐ comes from the collector of Q3005 in IC301 to the 3.58MHz band pass filter (B.P.F.) which is composed of L309 to L311 and C334 to C336.

The Rc/Bc signal Ⓑ that is taken out of the band pass filter goes to the 90° phase shifter/buffer Q309.

The 90° phase-shifted Rc/Bc signal obtained at the junction point of VC301 (Rc/Bc SEPARATION) and R3009 is then supplied to pin No. 3 of the Rc and Bc signal separation circuits IC308 and IC309. VC301 is a control for shifting the phase of Rc/Bc signals by 90°. The preblanking period of the Rc/Bc signal Ⓑ is cleaned up by the preblanking pulse Ⓒ which is sent from buffer Q313 to blanking noise trap Q308, so that the noise in the blanking period is removed. (Ⓓ)

The Rc/Bc signal Ⓕ at the emitter of Q309 is sent to 1H delay line DL303 through R3008 in block resistor BR301, where it is delayed by one horizontal line (64μsec). The 1H delayed signal Ⓗ is sent to IC307 for vertical transient spurious correction and the inverted corrected signal Ⓘ is sent to T301. The 1H delayed Rc/Bc signal of positive and negative phases are taken out of the secondary winding of T301. (The vertical transient spuroius correction will be described later.)

The Rc/Bc signals with positive and negative phases are sent to pin No. 2 of differential amplifiers IC308 and IC309, where they are mixed with the signal Ⓖ which is not delayed by 1H but is delayed 90° by Q309, thus forming Rc and Bc signals (Ⓙ and Ⓚ).

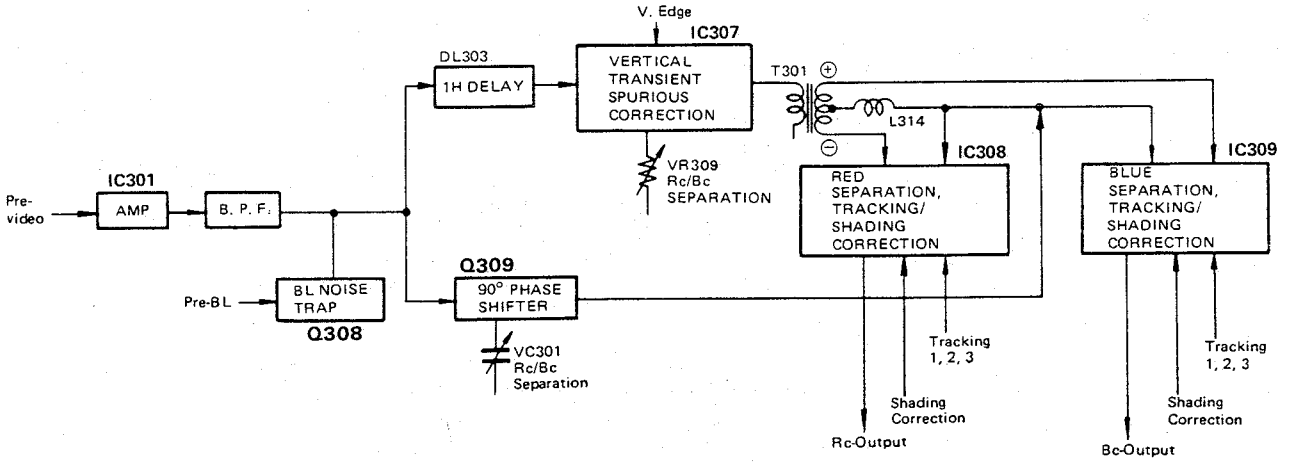

Fig. 67 Red and Blue Carrier Signal Separation Circuit

VR309 (Rc/Bc SEPARATION) controls the amplitude of the 1H-delayed signal, which also affects the separation of the blue and red signals. In addition to red and blue carrier signal separation, the differential amplifiers IC308 and IC309 perform shading correction and tracking correction which will be described later.

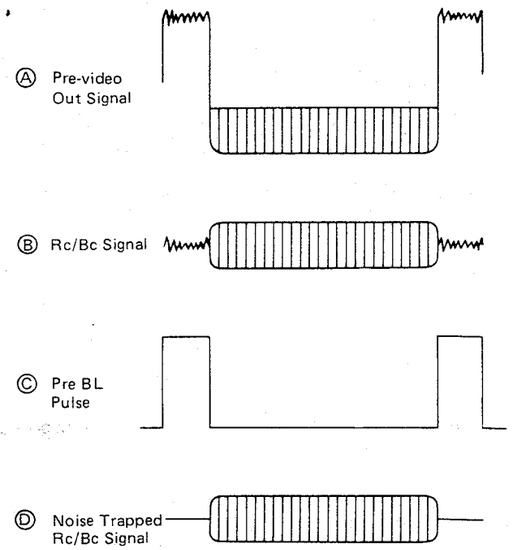

Fig. 68 Rc/Bc Signal

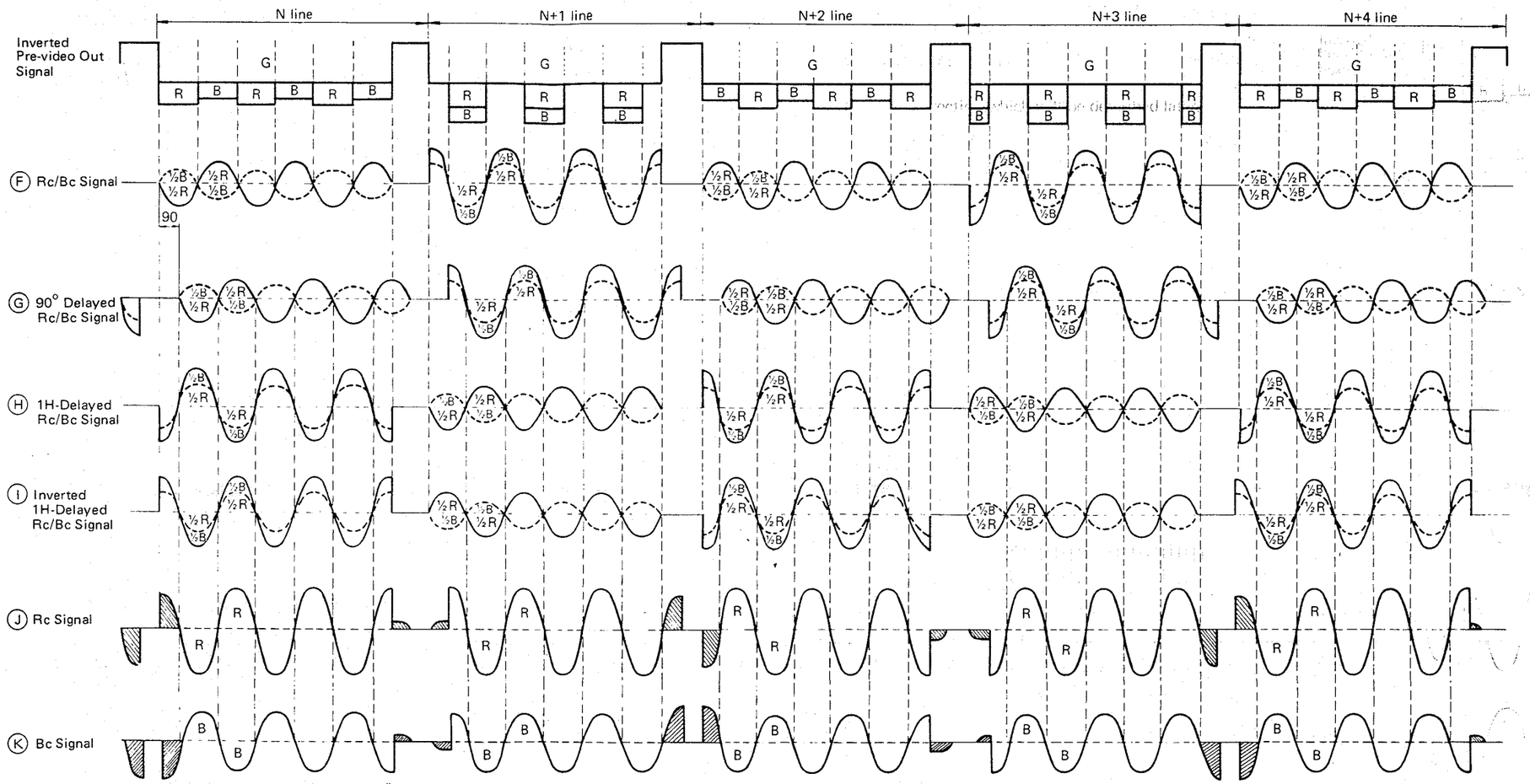

Fig. 69 Rc and Bc Signal Separation

4-8-1. Vertical Transient Spurious Correction Circuit

Outline

As described previously, the Rc and Bc signals are separated from each other by addition and subtraction of the Rc/Bc signal delayed one line (1H) and the phase shifted Rc/Bc signals but not delayed. When a pattern such as shwon in Fig. 70 is seen by the camera, the Rc/Bc signal which is not delayed appears as in Ⓜ in Fig. 71, and the Rc/Bc signal delayed one line (1H) becomes as in Ⓝ.

Therefore, it is impossible to secure vertical correlation between Rc/Bc signals of N+1 line, and a "pseudo signal" differing in level of Rc and Bc signals against Y signal Ⓛ is generated, and the vertical (V) edge of the object is unnaturally colored by this "pseudo signal".

The vertical transient spurious correction circuit controls the amplitude of 1H-delayed Rc/Bc signal Ⓝ corresponding to N+1 line with vertical (V) edge signal Ⓞ and the signal Ⓟ is made. This provides vertical correction between Rc/Bc signals Ⓜ and Ⓟ prior to color separation.

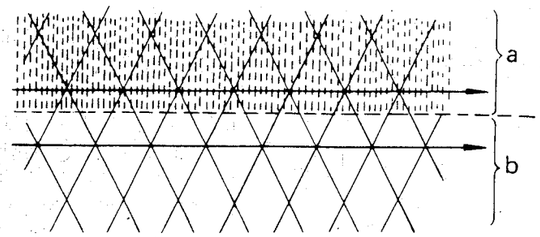

Fig. 70 a: Dark Object b: Bright Object

Details

The vertical edge signal Ⓞ from pin No. 11 of IC317 is sent to pin No. 5 of the vertical transient spurious correction circuit IC317.

Those parts of the 1H-delayed Rc and Bc signals Ⓝ which do not correlate with the Rc and Bc signals Ⓜ (not 1H-delayed) are controlled in level by the vertical edge signal Ⓞ.

The vertical edge signal which is mixed with the corrected Rc/Bc signal is removed in IC307 by adding the inverted vertical edge signal.

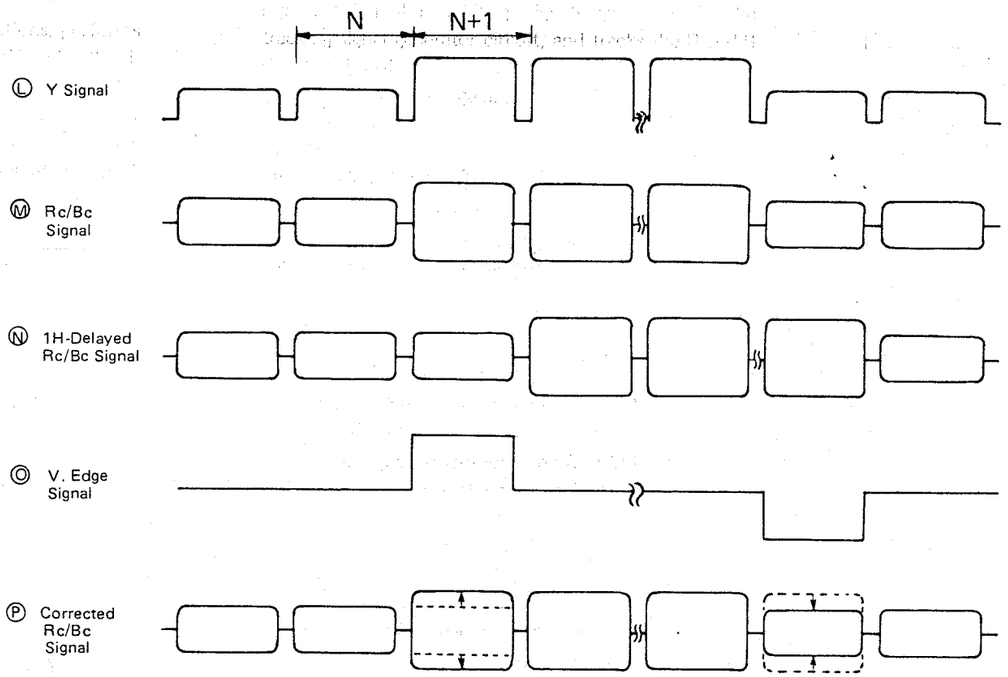

Fig. 71 Vertical Transient Spurious Correction

4-8-2. Shading Correction Circuit

Outline

Even when dynamic focus is applied to grid-4 (G4) of vidicon, the non-uniformity of modulation due to uneven focus on the vidicon target cannot be completely eliminated.

Modulation non-uniformity also occurs due to non-uniform structure in the photoconductive layer of the vidicon (manufacture tolerance).

The shading correction circuit compensates for residual picture shading using horizontal (H) and vertical (V) sawtooth and parabola signals generated in the deflection circuit board and introduced into IC308 and IC309 (pins No. 1 and 5).

Details

The vertical parabola and sawtooth, and horizontal parabola and sawtooth signals which are applied to the wiper arm of VR208 (R-H PARA), VR209 (R-H SAW), VR210 (R-V SAW), and VR211 (R-V PARA) on the shading correction signal circuit in the Deflection circuit board are adjusted for suitable levels (balance or misbalance, whichever is desired) before they are forwarded to the Rc signal separation circuit inside IC308 (pins No. 1 and 5) through terminal 1 and 2 of the multi-pin connector CN304.

IC308 aside from performing other functions, performs signal shading correction. Suppose a uniformly illuminated white object is seen by the camera and the modulated R (Rc) signal has a shading (unevenness of amplitude) such as that shown in Fig. 72 Ⓠ. This is sent to pin No. 3 of IC308 and the modulated R (Rc) signal delayed by 1H is also applied to pin No. 2 of the same IC.

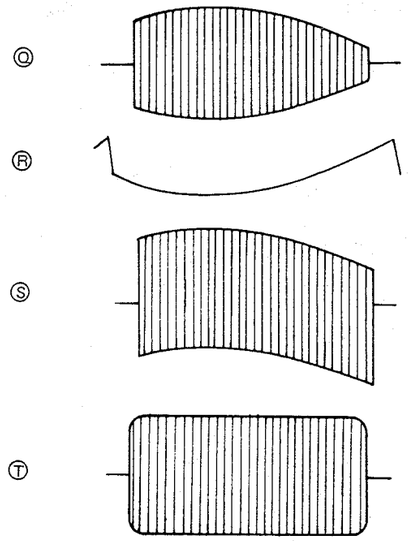

Fig. 72 Shading Correction

In this case, the four red shading controls are adjusted to generate a shading correction signal Ⓡ, from the signal supplied to pin No. 1 and pin No. 5 of IC308.

The Rc signal Ⓠ is modulated by the shading correction signal Ⓡ and a corrected Rc signal Ⓢ is produced.

The shading correction signal mixed with the Rc signal Ⓢ is removed by differential amplifier within the IC and an Rc signal Ⓣ is obtained. In this way, the shading of Rc signal is corrected.

The vertical parabola and sawtooth, and horizontal parabola and sawtooth signals which are applied to the wiper arms of VR204 (B-H PARA), VR205 (B-H SAW), VR206 (B-V SAW), VR207 (B-V PARA) on the Deflection circuit board are similarly forwarded to differential amplifier IC309 for Bc signal through terminal 3 and 4 of the multi-pin connector CN304.

IC309 aside from performing other functions, performs signal shading correction. The shading correction of the Bc signal is similarly done in IC309 as in the case of Rc signal shading correction.

4-8-3. Tracking Correction Circuit

Outline

This circuit corrects the gamma characteristic of R and B signals using the tracking signals generated in the tracking signal generator circuit, and tracks the R and B signals with the Y_L signal. (Refer to tracking signal generator circuit on page 32.)

Details

The tracking signal-1 Ⓤ is supplied from pin No. 6 of tracking signal generator IC303 to the wiper arms of VR312 (R TRACKING-1) and VR313 (B TRACKING-1). The tracking signal-2 Ⓥ is fed from pin No. 4 of IC303 to the wiper arms of VR311 (R TRACKING-2) and VR314 (B TRACKING-2). The tracking signal-3 Ⓦ is supplied from pin No. 2 of IC303 to VR310 (R. TRACKING-3) and VR315 (B TRACKING-3).

The tracking signal-1 and tracking signal-2 whose levels are set by VR312 and VR311 are fed to pin No. 1 and 5 of the Rc signal separation circuit IC308, where the positive or negative tracking signal-1 and tracking signal-2 are made. The tracking signals thus made in IC308 and the tracking signal-3 whose level is set by VR310 modulate the Rc signal Ⓧ to correct the gamma characteristic of R signal Ⓨ.

In this way, the R signal matches the Y_L signal.

VR312 corrects the relatively low level of R signal, VR311 for the relatively high level, and VR310 for the highest level.

The tracking correction for the B signal is similarly done with IC309, VR313, VR314, VR315.

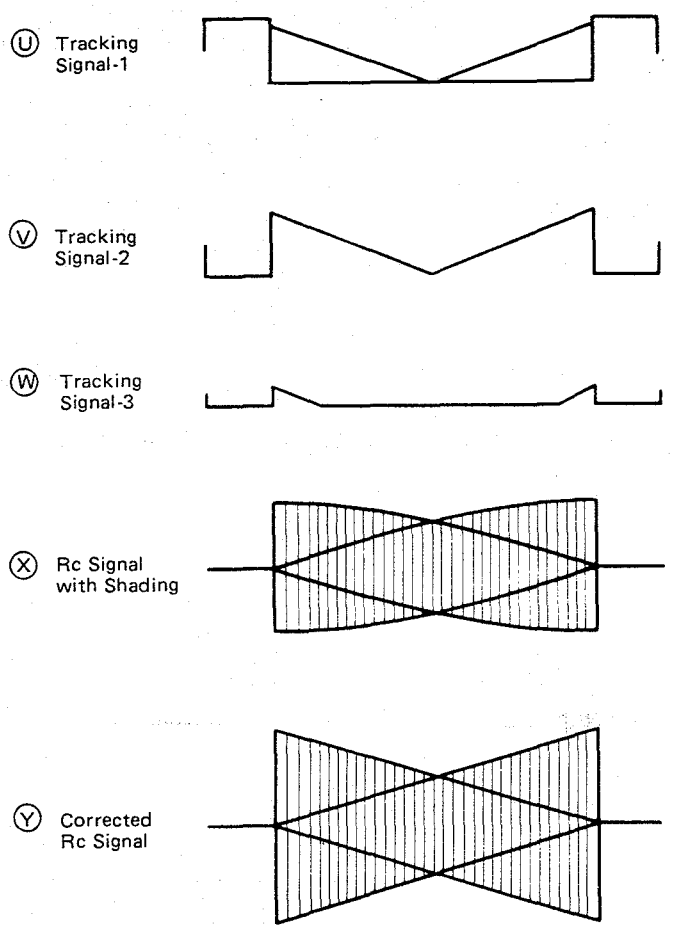

Fig. 73 Tracking Correction-1

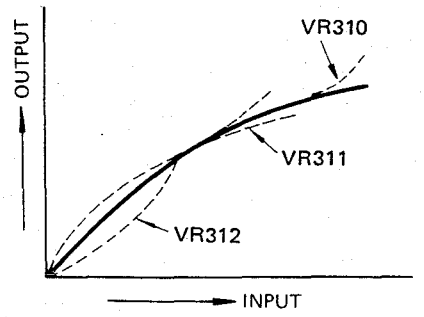

Fig. 74 Tracking Correction-2

4-9. Blue Signal Detection Circuit

Outline

This circuit receives the modulated blue (Bc) signal from the red and blue carrier signal separation circuit and removes the modulation. The blue video signal which undergoes gamma correction in this circuit is supplied to the B-Y_L modulator circuit.

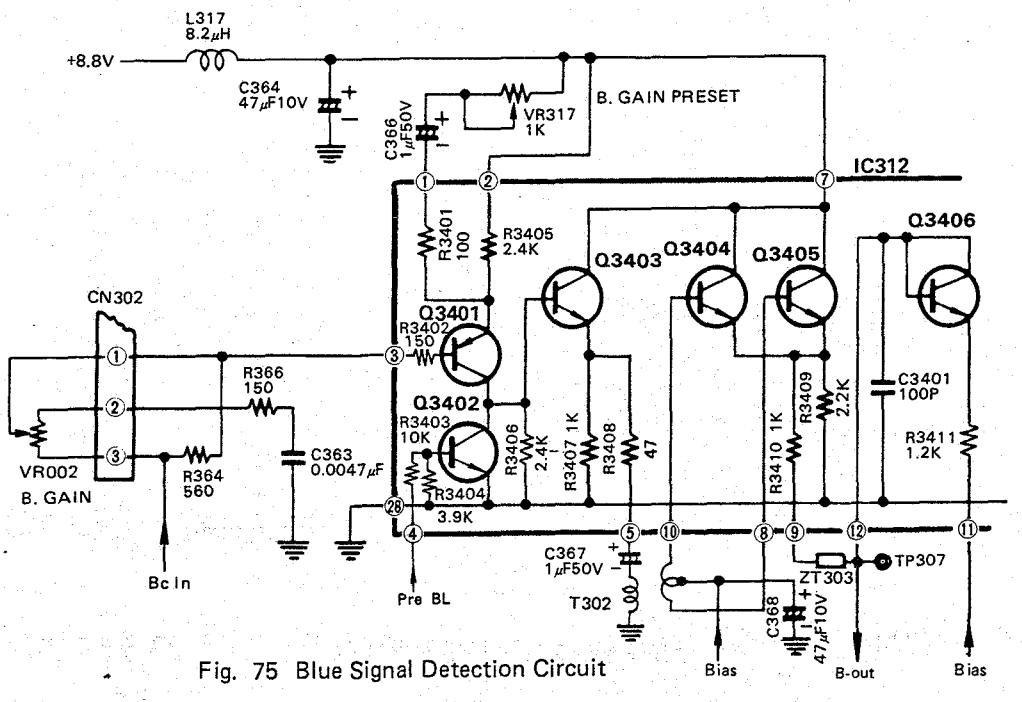

Fig. 75 Blue Signal Detection Circuit

Details

The Bc signal from Bc signal separation circuit IC309 (pin 7) is applied to the base of amplifier Q3401 through VR002 (B. GAIN) on the side of the camera. The amplified blue signal is routed via buffer Q3403 to a full-wave detector consisting of T302, Q3404 and Q3405.

When the amplified Bc signal Ⓐ is supplied to the primary winding of T302, the positive Bc signal Ⓑ and negative Bc signal Ⓒ are taken out of the secondary winding of T302. These Bc signals are supplied to the bases of Q3404 and Q3405 respectively. Q3404 and Q3405 turn ON during the positive period of the input signals.

Therefore, the detected signal Ⓓ is obtained at the emitters of Q3404 and Q3405.

This detector which extracts the blue signal produces a 7.16MHz ripple signal (unwanted). The 7.16MHz component is removed by a 3.16MHz ceramic trap TZ303 leaving only the blue signal Ⓔ.

The resultant blue signal is gamma-corrected by the circuit associated with Q3406 before it is sent to the B-Y_L modulated circuit IC314 through pin No. 12 of IC312. (Refer to page 29 for the gamma correction.)

VR002 (B GAIN) is a control for fine adjustment of the blue signal gain. VR317 (B GAIN PRESET) is a blue signal level presetting control.

The preblanking period of the Bc signal is cleaned up by the preblanking pulse which is sent to blanking noise trap Q3402.

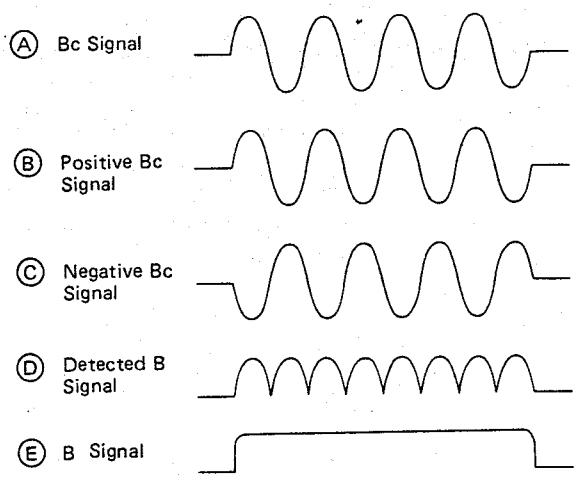

Fig. 76 Blue Signal Detection

4-10. Red Signal Detection Circuit

Outline

The circuit uses the same design as the blue signal detection circuit. The circuit receives the modulated red (Rc) signal from the red and blue carrier signal separation circuit and converts it to the red video signal.

After the red video signal udergoes gamma correction, it is supplied to the R-Y_L modulation circuit.

Details

The Rc signal from the Rc signal separation circuit IC308 (pin No. 7) is sent to the R-Y_L modulator circuit IC313 after gain control (Q3407), blanking noise trap (Q3408), R detector (T303, Q3410, Q3411), pedestal control (Q3412, Q3413) and gamma correction (Q3414).

VR001 (R GAIN) and VR318 (R GAIN PRESET) are red gain controls; VR001, a fine adjust operation control; and VR318, a preset control.

VR305 (R PED) connected between pin No. 3 and pin. No. 6 of bias circuit IC304, and connected to the base of Q3412 through pin No. 23 of IC312 sets the pedestal of the red signal.

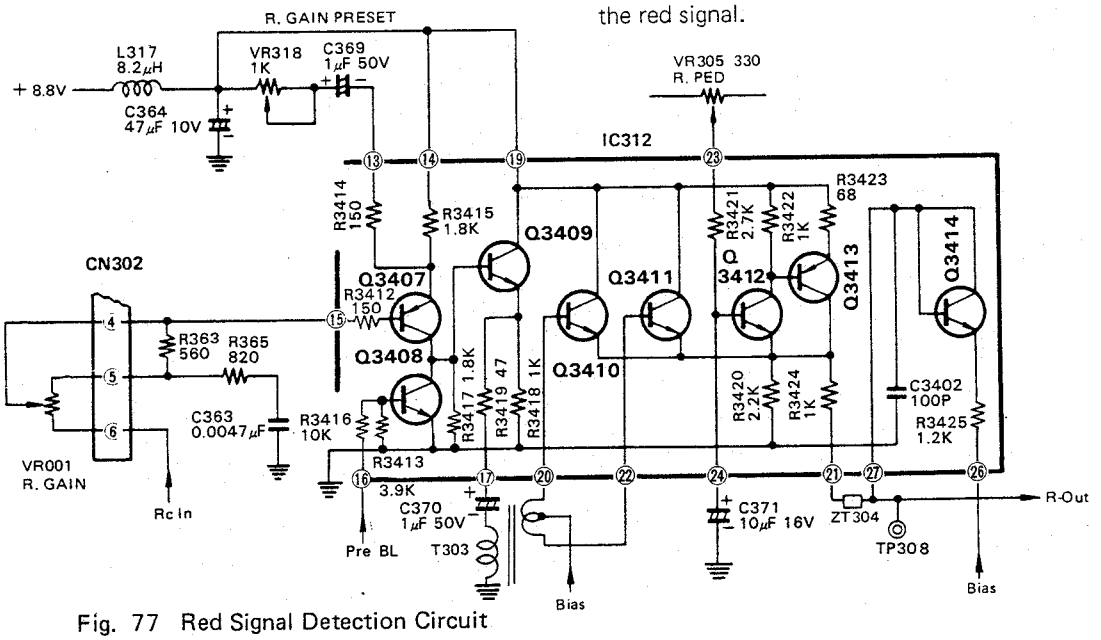

Fig. 77 Red Signal Detection Circuit

4-11. Color Reproduction Correction Circuit

Outline

This circuit corrects colorimetry imperfection (particularly red) resulting from the spectral characteristic of the stripe filter which affects mostly the red and green signals.

Details

The red signal is sent to the base of Q3454 in IC315 from the red signal detection circuit via pin No. 1 of IC315, and the Y_L to the base of Q3452 from the Y_L signal circuit via pin No. 10 and R3452 in IC315.

The signals are subtracted on this differential amplifier stage forming ($R-Y_L$) signal at Q3452 collector. The mixed output is sent via Q3451 collector, and mixed as a corrective (Y_L-R) signal through R3453 and R3454 with the main Y_L signal comes through R3452 and R3459 to correct the Y_L signal.

This mixed signal [Y -a (YL-R)] is then supplied to pin No. 5 of $R-Y_L$ modulator IC313 and pin No. 1 of $B-Y_L$ modulator IC314.

When the camera is pointed at a black and white object, the signal level of R and Y_L is the same. Therefore, no correction signal is mixed with the main Y_L signal. However, when the camera is pointed at a colored object, the correction signal is generated.

VR322 (COLOR REPRODUCTION) sets amount of correction.

4-12. Chrominance Signal Generator Circuit

Outline

This circuit matrixes the R signal, B signal, and the Y_L signal with the "color reproduction correction signal" to generate the $R-Y_L$ and $B-Y_L$ color difference signals, and modulates these base band color difference signals on two subcarrier differing in phase by 90° to generate a chrominance signal.

Details

The R signal is supplied to pin No. 1 of the $R-Y_L$ balance modulator IC313. The Y_L signal with "color reproduction correction signal" [YL-a (YL-R)] is mixed with a burst flag pulse (BFP) and supplied to pin No. 5 of IC313, where the R-[YL-a (YL-R)] color difference signal is made up by a differential amplifier inside IC313. The R-[YL-a (YL-R)] signal modulates the R-YL subcarrier applied to pin No. 2 of IC313.

The IC produces an AM modulated (suppressed carrier) signal on pin No. 7.

Similarly, the B signal is mixed with the burst flag pulse (BFP) and supplied to pin No. 5 of the B-YL balance modulator IC314. The YL signal with the "color reproduction correction signal" [YL-a (YL-R)] is supplied to pin No. 1 of IC314 where the B-[YL-a (YL-R)] color difference signal is manufactured by a differential amplifier inside IC314. The color reproduction correction signal does not correct the blue color reproduction, therefore, it can be neglected. The B-YL signal and the B-YL subcarrier (its phase is advanced 90° with respect to R-YL subcarrier) applied to pin No. 3 of IC314 undergo suppressed carrier quadrature modulation inside IC314.

When the camera is pointed at a black and white object, the color reproduction correction signal is not applied, because the R and Y_L signal levels are equal. When the camera is pointed at a colored object, the color reproduction signal corrects to product better red and green images.

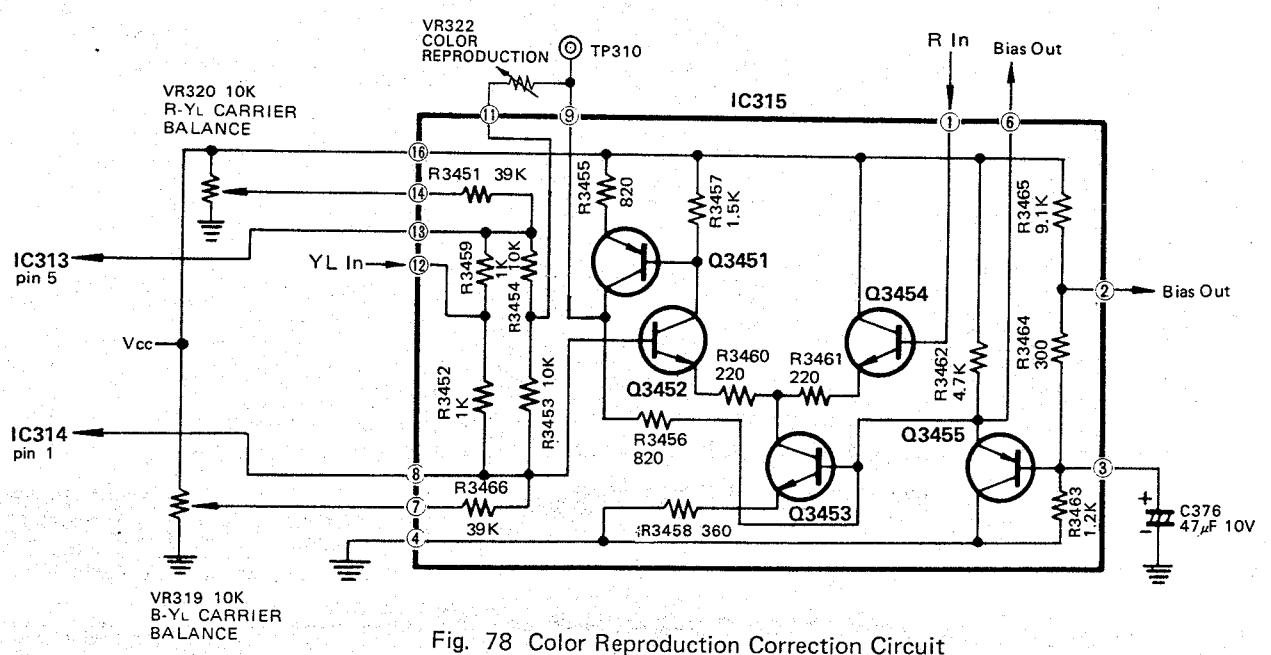

Fig. 78 Color Reproduction Correction Circuit

VR320 (R-Y_L CARRIER BALANCE) and VR319 (B-Y_L CARRIER BALANCE) control the DC inputs to IC313 and IC314, thus minimizing carrier leakage. The R-Y_L modulated signal from pin No. 7 of IC313 and the B-Y_L modulated signal from pin No. 7 of IC314 are added by R371 and R372 forming the chrominance signal with burst.

The chrominance signal is then forwarded to the low luminance chroma suppression circuit through VR321 (CHROMA GAIN). VR321 adjusts the chrominance signal level. L322 and C398 make a 3.58MHz trap.

The chrominance signal with burst made by mixing the R-YL and B-YL modulated signals with R369 and R370 is supplied to burst gate Q312. The negative blanking pulse is fed to the base of Q312 to turn ON and OFF Q312. The burst signal gated by the blanking pulse and obtained at the collector of Q312 is then mixed with the chrominance signal through C379 and R374.

4-13. High Y Level Chroma Clip Circuit

Outline

This circuit clips the green color which results when an excessively bright object is shot with the camera. This is caused by the lack of vidicon beam. When the beam of the vidicon is insufficient to discharge the target due to excessive light reflected from a brightly illuminated object, the modulated red(R)/blue(B) signal components riding on top of the green(G) signal become satulated (Ⓐ and Ⓑ). Therefore, the bright picture parts turn into an unnatural green color due to lack of red and blue.

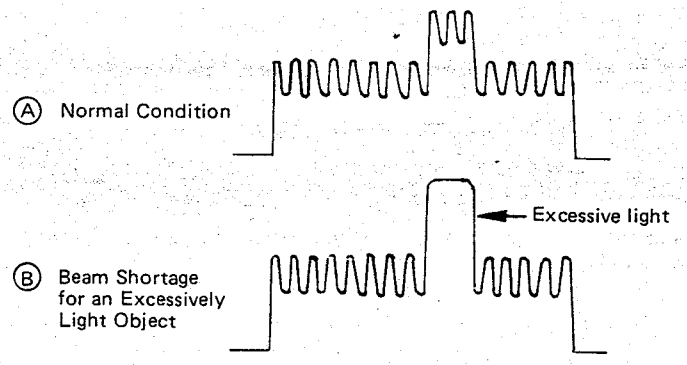

Fig. 80 Beam Shortage

Details

The tracking signal-3 (high luminance level signal) which is generated in the tracking signal generator circuit IC303 is supplied to the gate of Q3552 in IC318 from Q3107 in IC303.

At the gate of Q3552, the high luminance level signal is mixed with the positive blanking pulse supplied via pin No.9 of IC318. Q3552 is turned ON by the blanking pulse and high luminance level signal (due to a very bright object being scanned). When Q3552 is turned ON C386 forms a low impedance path to ground diverting the chrominance signal from Q3305 and Q3306 in the low level chroma suppression IC310. The chroma is in effect clipped and does not reach the PAL output. If this circuit is malfunctioning, the bright picture parts would turn into an unnatural green color, and the chroma signal would appear on the blanking period of the PAL signal.

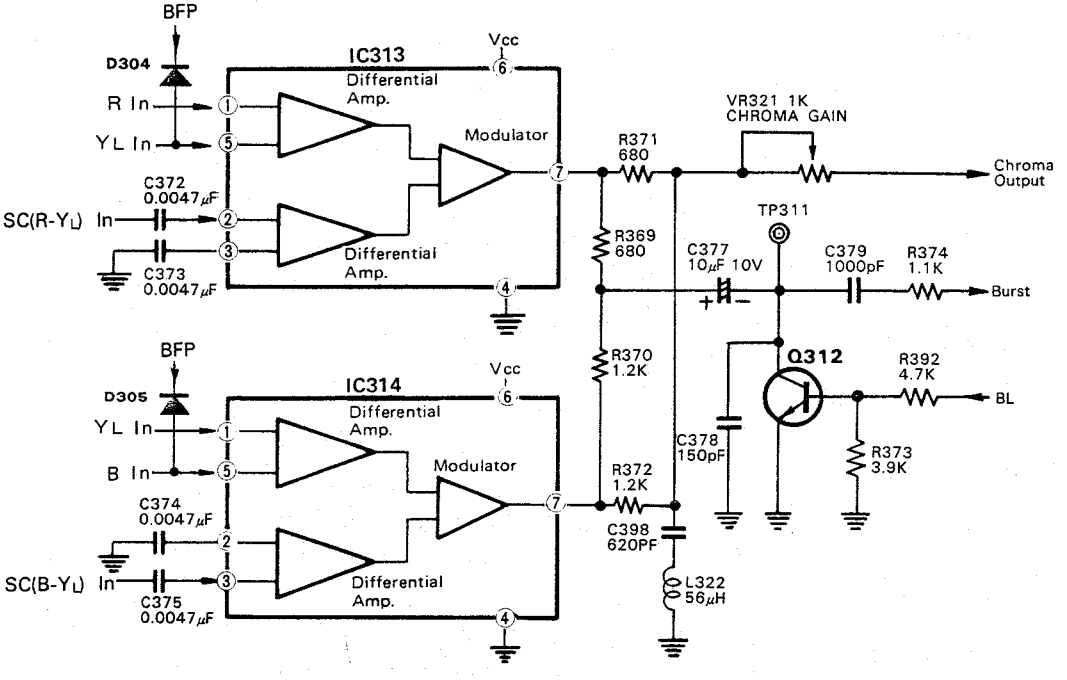

Fig. 79 Chrominance Signal Generator Circuit

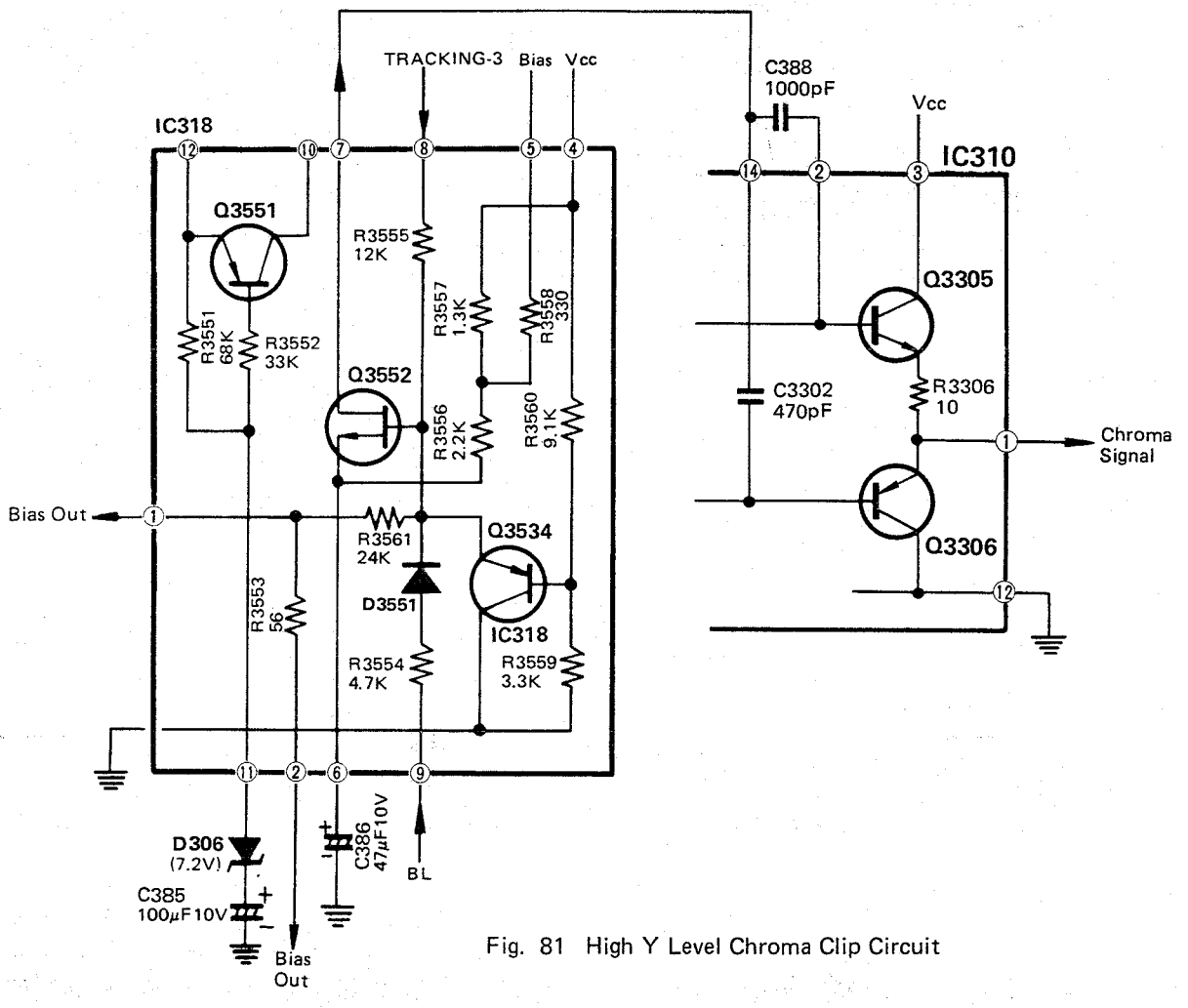

Fig. 81 High Y Level Chroma Clip Circuit

4-14. Low Level Chroma Suppression Circuit

Outline

This circuit enhances color reproduction in the low luminance condition by improving the white balance, when the color of the object is faint.

Details

The chroma signal is forwarded to the emitter of Q3302 in IC310 through pin No.8 of IC310, and the horizontal aperture signal is also fed to the emitter of Q3302 through pin No.9 of IC310. The mixed signal obtained at the collector of Q3302 is split and routed via amplifiers Q3301 and Q3304 to the output circuit consisting of Q3305 and Q3306. Transistors Q3305 and Q3306 clip chroma during low illumination conditions. The clip level is determined by Q3303, D302 and voltage drop across R3304. The base-emitter voltage(Vbe) of Q3305 and Q3306 is 0.7V.

If the voltage between the base of Q3305 and Q3306 is set to more than 1.4V, the chrominance signal supplied to Q3305/Q3306 is not clipped since the positive portion of chrominance signal turns Q3305 ON and the negative portion turns Q3306 ON. However, practically the voltage between the base of Q3305 and Q3306 is set as follows.

Vo = Vbe of silicon transistor Q3303 + forward voltage of germanium diode D302 + voltage drop of R3304

= 0.7 + 0.3 + R3304 x i

= 1.0 + R3304 x i

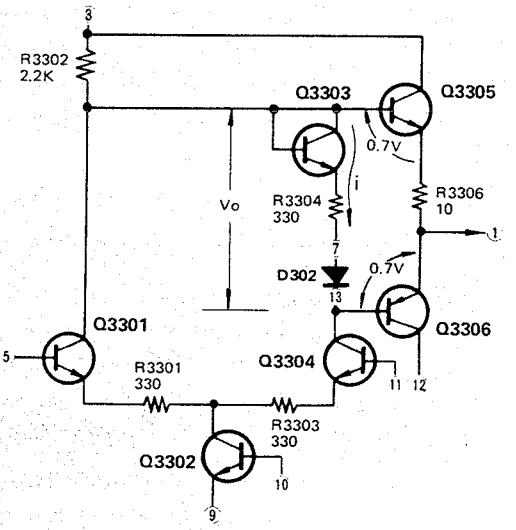

Fig. 82 Low Level Chroma Suppression Circuit

The actual Vo voltage is lower than 1.4V. Therefore, the center portion of chrominance signal is clipped by the voltage difference between the actual Vo voltage and 1.4V.
In this way, the low chrominance signal is clipped.
A white-suppression Y(sup) signal is applied to the base of Q3304. Its polarity is such that the current flowing to Q3304 will decrease when luminance is low. In this case, the voltage drop across R3304 also decreases. Therefore, the difference between the actual Vo voltage and 1.4V increase to clip the chroma signal. In this way, the chrominance signal corresponding to low luminance signal is suppressed mainly.
The Y(sup) signal applied to the base of Q3304 is canceled as it reaches the base of Q3305, because the signal at the collector of Q3304 is opposite in polarity to the signal which comes from the emitter of Q3304 and routed via Q3301.
The suppressed chroma signal is supplied to the chrominance burst mix circuit and white balance detector circuit.

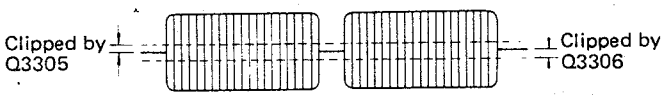

Fig. 83 Low Level Chroma Suppression

4-15. Chrominance/Burst Mix Circuit

Outline
In this circuit, the chrominance signal and the burst signal are mixed. The mixed signal is supplied to the Y/chrominance mix circuit.

Details
The chrominance signal Ⓐ from pin No. 1 of the low level chroma suppression circuit IC310 is mixed through C347, R356 and R3307 with the gated burst signal Ⓑ supplied from burst gate Q312 in the chrominance signal generator circuit, and burst flag pulse (BFP) Ⓒ supplied from pin No. 6 of IC321 in the pulse generator circuit. The BFP is mixed to prevent the burst signal from clipping by low level clip circuit in the PAL out circuit. The mixed signal Ⓓ is fed to the Y/chrominance mix circuit through C348.

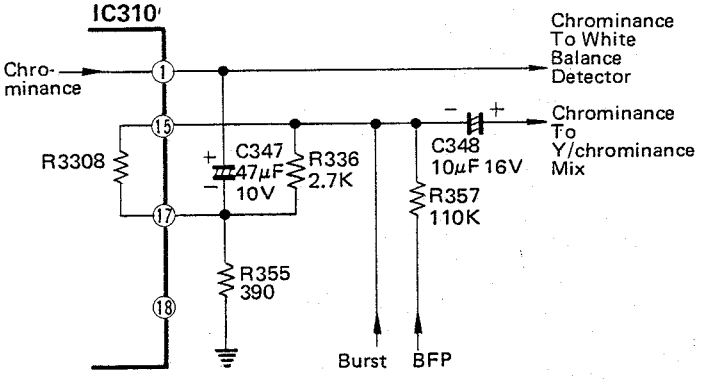

Fig. 84 Chrominance/Burst Mix Circuit

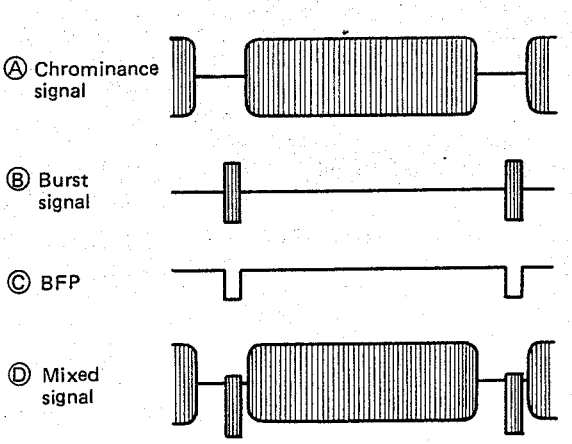

Fig. 85 Chrominance/Burst Mix

4-16. White Balance Detector Circuit

Outline
This circuit rectifies the chrominance signal due to imperfect white balance into a DC voltage, and supplies it to the white balance/low light indicator circuit of Viewfinder circuit board (Electronic viewfinder) as a white balance control DC voltage which controls the vertical position of white balance bar on the CRT screen (Electronic viewfinder).

Details
The blanking (BL) pulse Ⓐ is supplied to the collector of Q310 and the chrominance signal Ⓑ from pin No. 1 of IC310 is supplied to the base of Q310. The chrominance signal Ⓑ is mixed with the BL pulse Ⓐ at the collector of Q310. The mixed signal Ⓒ obtained at the collector of Q310 is rectified by D303 and C351. The chrominance signal corresponding to picture area is rectified by mixing the BL pulse. The DC voltage is supplied to the white balance/low light indicator circuit (Electronic viewfinder). The DC voltage increases during low chrominance condition and decreases during high chrominance condition. VR316 (WHITE BALANCE) controls the position of the white balance indicator bar when the camera is set for the best white balance.

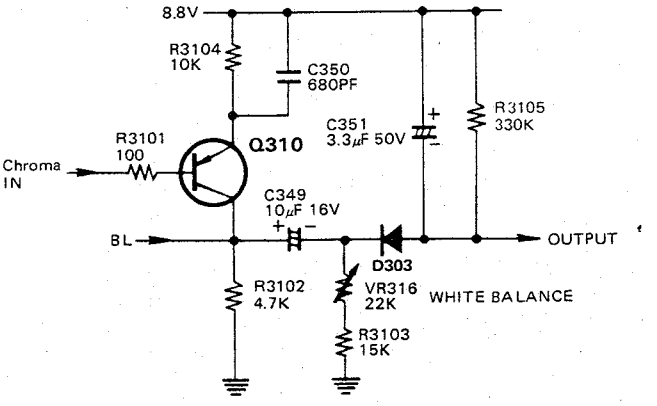

Fig. 86 White Balance Detector Circuit

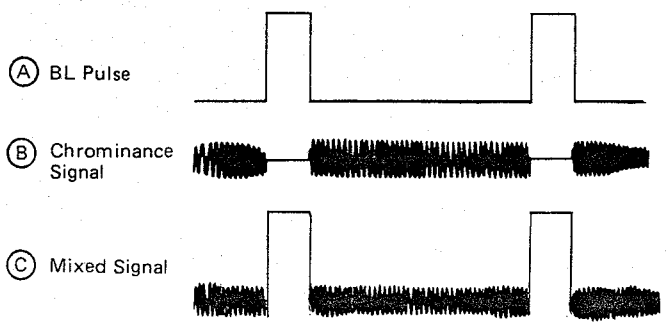

Fig. 87 White Balance Detector

4-17. Y/Chrominance Mix Circuit

Outline

In this circuit, chrominance, H aperture signal, V edge signal, and the luminance signals are mixed. After the mixed signal is amplified, it is supplied to the PAL output circuit.

Details

The luminance (Y_H) signal is supplied to the base of Q3252 in IC306 through pin No.12. The mixed signal which contains the chrominance and H aperture signals is supplied to the collector of Q3252 via pin No.11. The V edge signal is also supplied to the collector of Q3252. These signals are mixed at the collector of Q3252. The mixed signal is then fed through amplifier Q3251 and buffer Q3253 to clamp circuit Q3254 where the blanking level of the mixed signal is clamped by the Hs pulse supplied to the base of Q3254.

The clamped signal is supplied to the PAL out circuit IC311 via amplifier/buffer Q3255 and pin No.3 of IC306.

The mixed signal at the collector of Q3255 is supplied to AIC detector Q3256 in IC306.

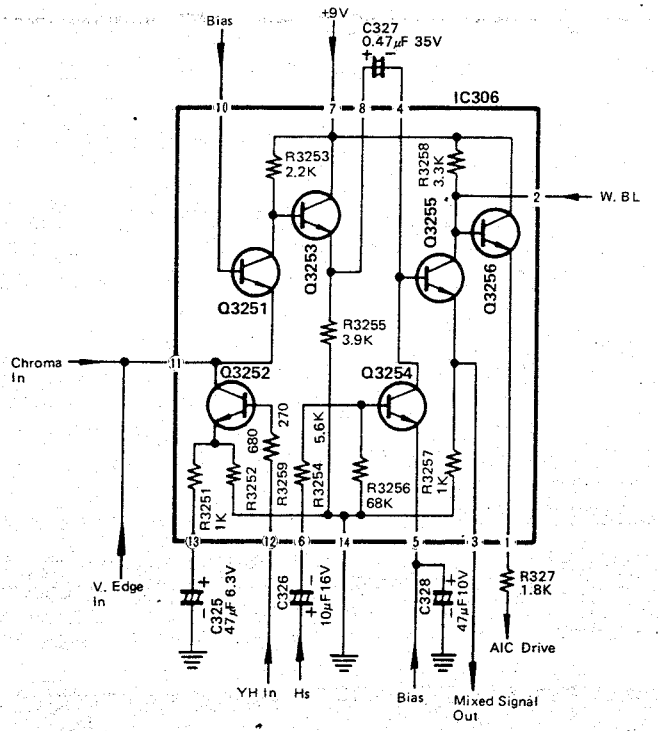

Fig. 88 Y/Chrominance Mix Circuit

4-18. AIC Detection and AIC Start Delay Circuit

Outline

The AIC detector circuit generates a DC voltage corresponding to the incoming light intensity. It controls the iris opening of the auto iris mechanism.

It takes some time for the cathode of the vidicon to be heated sufficiantly in order to emits electrons at full force after turning ON the power switch. Therefore, the output signal of the vidicon is gradually resolved from its low signal level. When the power switch is turned ON, the output signal of the vidicon is very low and the iris of AIC lens is wide open.

At this time, if the camera is pointed at an extremely bright object, the bright image may "burn" the vidicon target.

Also, after turning ON the power switch, the camera initially produces an unnatural green color since the red(R) and blue(B) modulated components are riding on the top of the green signal, and the R and B signals are resolved last.

The AIC start delay circuit generates the DC voltage which closes the lens iris initially after power turn ON.

Details

The luminance/chrominance mixed signal supplied from the Y/chrominance mix circuit is amplified by Q3255. The chrominance signal mixed with the luminance (Y) signal is removed by C329 connected to the collector of Q3255, and only the Y signal Ⓐ is obtained. The positive blanking (BL) pulse Ⓑ is supplied to the base of switching circuit Q3602 in IC319. When Q3602 is switched ON by the positive part of the BL pulse, an attenuated Y signal is obtained at the collector of Q3255 since R3605-R3607 which are connected to Q3602 are switched in parallel with Q3256 collector resistance R3258. When Q3602 is switched OFF by the negative part of BL pulse, the amplified Y signal by Q3255 is obtained because R3605-R3607 are disconnected from R3258. The Y signal Ⓒ of which picture portion is mainly amplified is rectified by Q3256, and C260, R250 and R251 in the Deflection circuit board, and converted into a DC voltage.

The rectified DC voltage corresponding to the picture portion of Y signal (incoming light intensity) is then supplied to the auto iris control (AIC) circuit in the Deflection circuit board for controlling the lens iris.

When the power switch is initially turned ON, +9V is applied to the emitter of Q3551 in IC318, and Q3551 is switched ON due to the surge current flowing into C385. When Q3551 is switched ON, +9V at the collector of Q3551 is fed to the base of Q3256 in IC306, and the emitter potential of Q3256 becomes approx. 8V regardless of input signal to Q3256. This voltage is supplied to the AIC circuit in the Deflection circuit baord to close the lens iris. This state is exists for approx. 15 seconds until C385 is fully charged and Q3551 is switched OFF. When Q3551 is switched OFF, the DC voltage corresponding to the incoming light intensity is supplied to the AIC circuit from the emitter of Q3256 to control the lens iris.

In this way, the lens iris is closed during the initial period after the power switch is turned ON in order to prevent the vidicon from burning and avoide unnatural green color in the highlights.

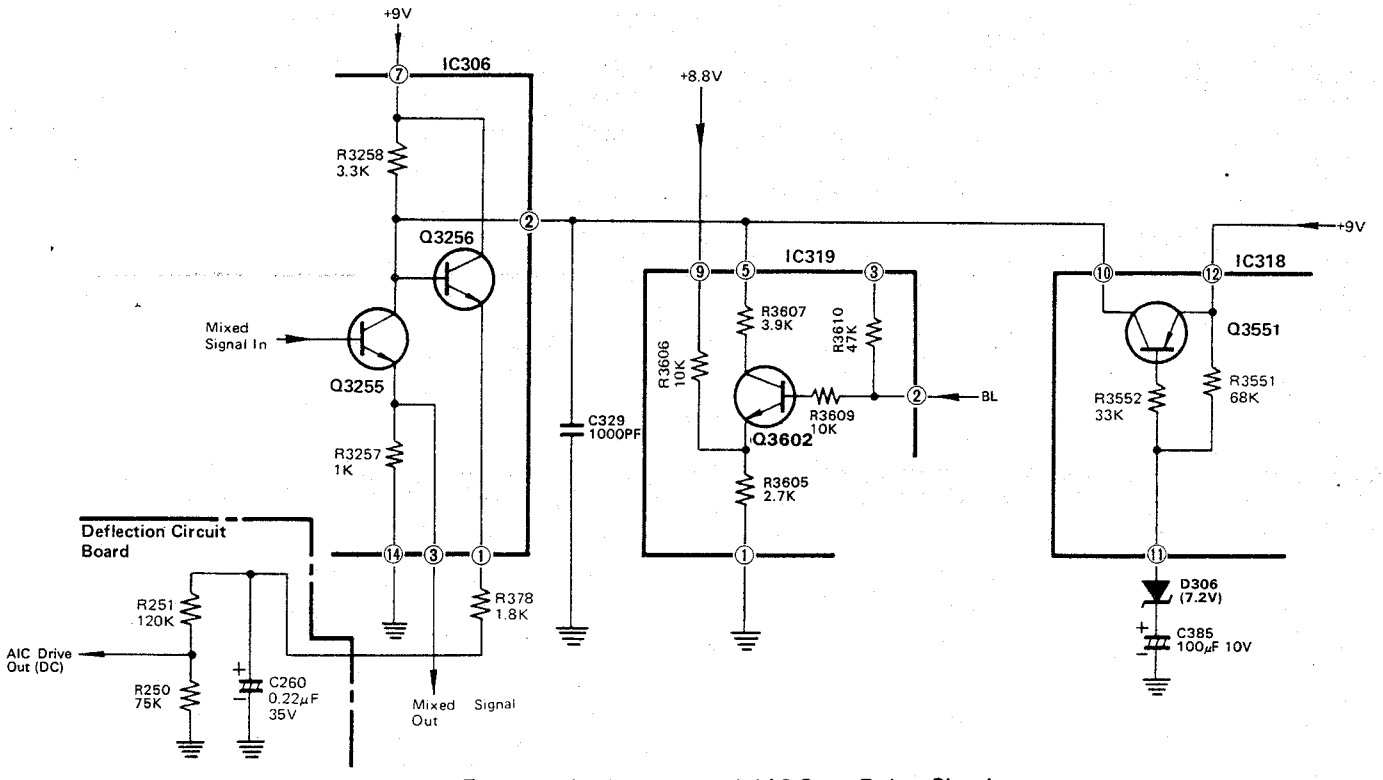

Fig. 89 AIC Detector and AIC Start Delay Circuit

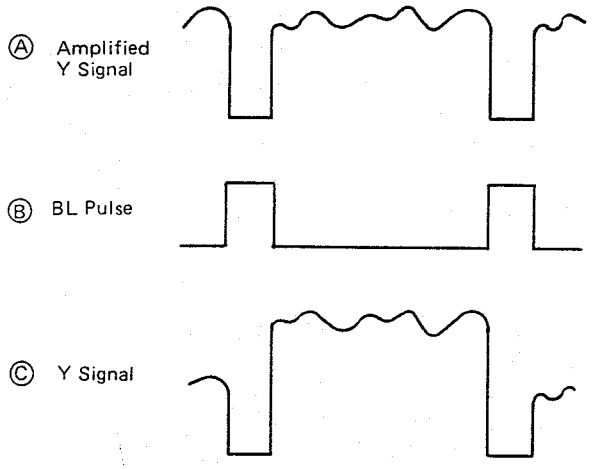

Fig. 90 AIC Detection

4-19. PAL Out Circuit

Outline

In this circuit, the chrominance/luminance mixed signal with burst and the sync signal are mixed to produce a composite PAL signal. The PAL signal is applied to the portable VCR, or a desk-top type VCR through the power supply.

Details

The negative video signal Ⓐ contains the chrominance, luminance and burst signal from the Y/chrominance mix circuit and the blanking (BL)/BFP pulse Ⓑ from pulse generator circuit (supplied via pin No. 18 of IC311 and Q3351) mixed at the base of Q3352.

The mixed signal Ⓒ is supplied to the low level clip circuit consisting of Q3352 and Q3353, where the low level portion (blanking) of the video signal is clipped at the emitter voltage of Q3353 (reference level). The clipped signal Ⓓ is inverted to positive signal by amplifier Q3355 and mixed with the mixed signal Ⓔ of the BFP, composite sync pulse and blanking pulse (for sync and pedestal level correction), which are sent to the emitter of Q3355. The PAL signal Ⓕ obtained at the collector of Q3355 by mixing these signals is applied to the push-pull PAL output circuit consisting of Q3354, Q3356, Q3357 and D3352. The PAL signal at the emitter of Q3357 is supplied to the VCR through pin No.6 of IC311 and terminal No.2 of multi-pin connector CN303.

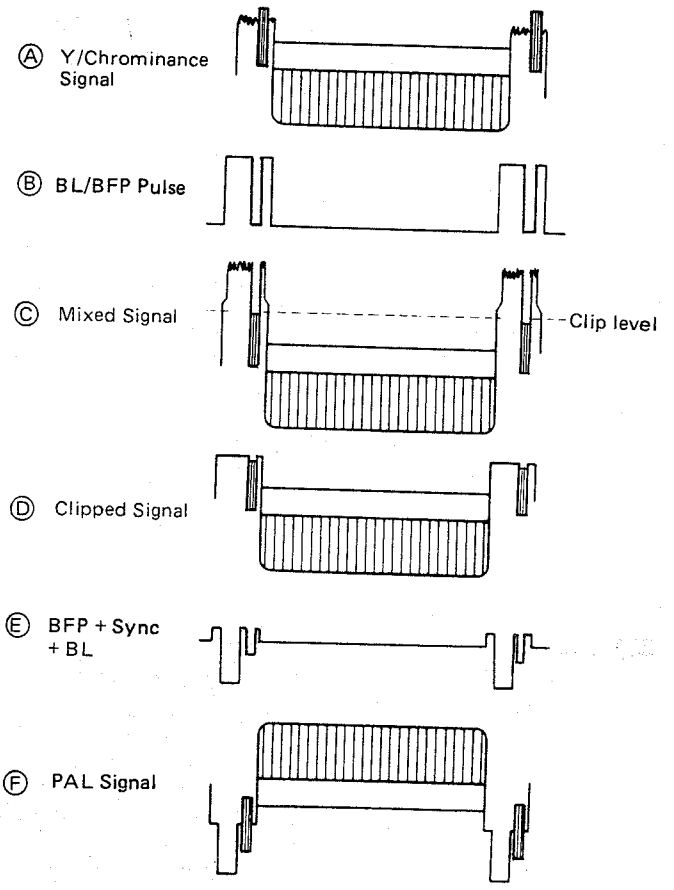

Fig. 91 PAL Signal

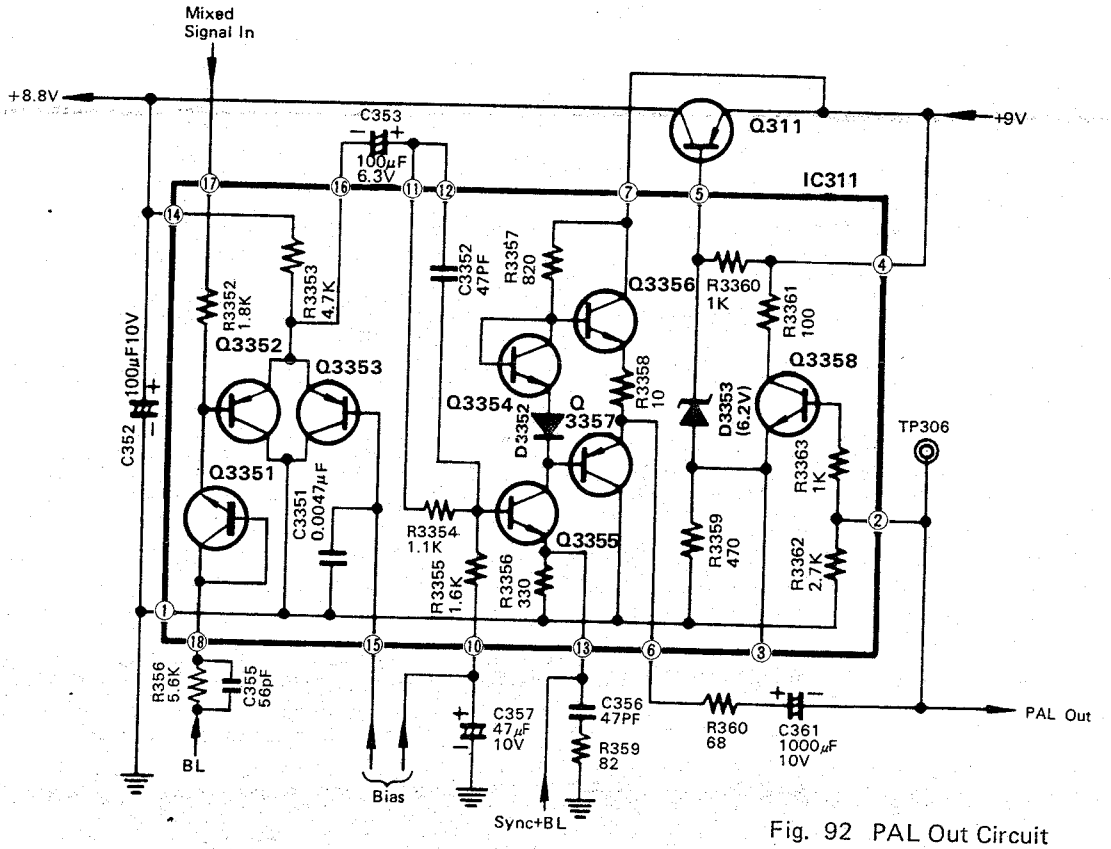

Fig. 92 PAL Out Circuit

4-20. Playback Sense Circuit

Outline

This circuit senses the recording or playback mode of the portable VCR. When the portable VCR is set into the recording mode, this circuit sets the camera to supply the PAL output signal to the viewfinder, and the portable VCR for recording.

When the portable VCR is set into the playback mode, this circuit shuts off the camera function and supplies the playback signal from VCR to the viewfinder.

Details

When the portable VCR is set into the recording mode, no DC bias is applied to the base of Q3358 in IC311 and Q3358 remains OFF, and 6.2V zener diode D3353 connected between +9V and ground through R3360 and R3359 turns ON to switch Q311 ON. Therefore, 8.8V at collector of Q311 is supplied to Process circuit board and Preamplifier circuit board. At the same time, the PAL output signal at emitter of Q3357 is fed to the viewfinder via terminal No.2 of CN303, and the portable VCR for recording via terminal No.2 of CN306.

When the portable VCR is set into the playback mode, the playback signal which rides on top of +6VDC is supplied from the VCR to the base of Q3358 through terminal No.2 of CN306.

Q3358 is turned ON by the +6V and the potential of its emitter and D3353 anode become approx. +5.3V. Therefore, the 6.2V zener diode D3353 is turned OFF causing Q311 to be cut OFF shutting OFF the Process circuit board and preamplifier circuit board.

In this way, the PAL signal is not generated in the camera and only the playback signal from the VCR is supplied to the viewfinder through terminal No.2 of CN303.

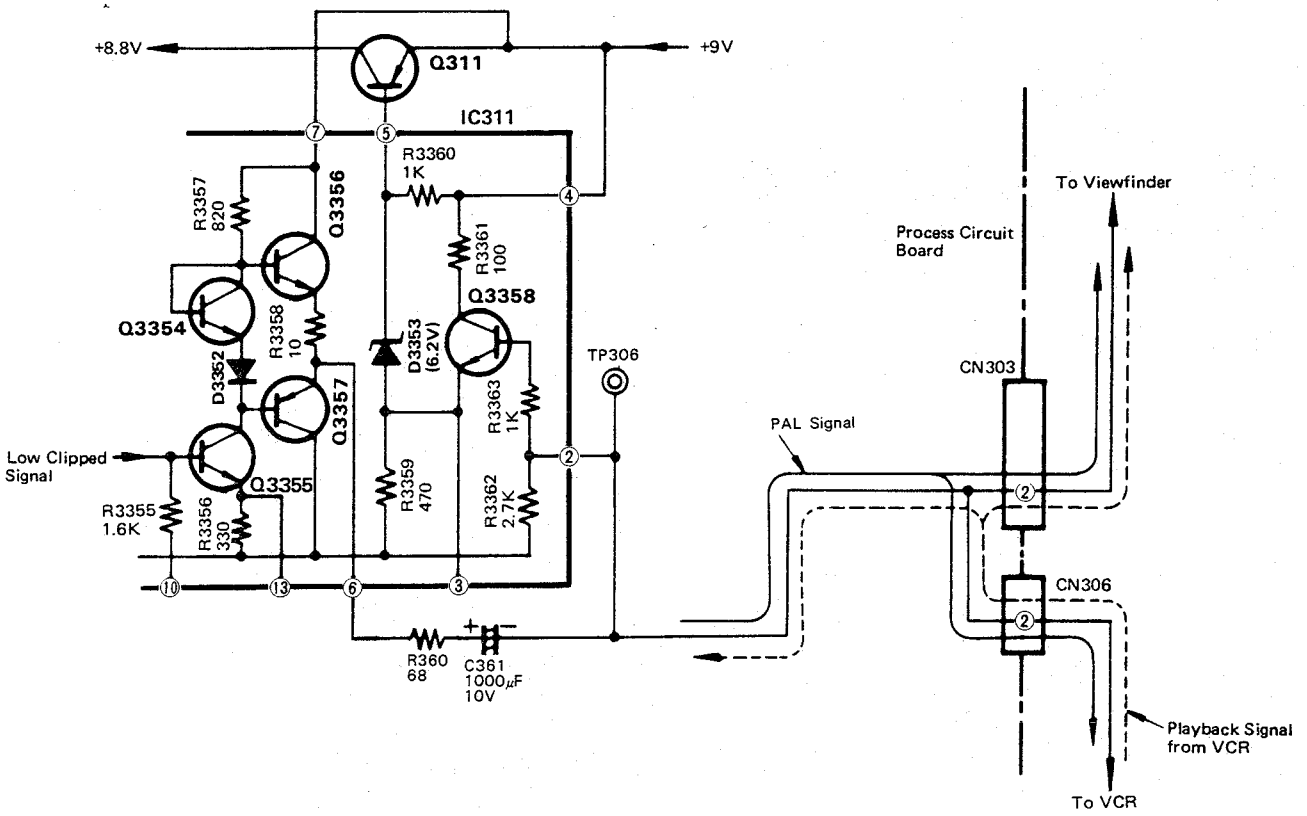

Fig. 93 Playback Sense Circuit

5. Electronic Viewfinder Circuit Boards (YWV3206EZK08, ZK09, ZK10)

Electronic Viewfinder Circuit Board (YWV3206EZK08, ZK09, ZK10) consists of following circuits.

		Page
5-1.	Video Amplifier Circuit	51
5-2.	Sync Separation Circuit	51
5-3.	Vertical Deflection Circuit	52
5-4.	Horizontal Deflection Circuit	52
5-5.	High Voltage Circuit	54
5-6.	White balance/Low Light Indicator Circuit	54

5-1. Video Amplifier Circuit

Outline

This circuit amplifies the video signal supplied from the Process circuit board and fed it to the cathode ray tube (CRT) together with the blanking pulse which is used to block retrace line on the CRT screen.

Details

The PAL signal from the Process circuit board is supplied to buffer Q801 through terminal No.2 of CN802. The signal at the emitter of Q801 is fed to amplifier Q810 through VR801 (CONTRAST). CL801 is a trap for removing the chrominance component in the PAL signal. The amplified signal is applied to a mixing amplifier Q811. The horizontal pulse from the heater winding of flyback transformer (FBT) T8001 and vertical (V) sawtooth signal from IC802 are supplied to base of Q812.

The composite blanking (BL) pulse obtained at the collector of Q812 by mixing the H pulse and V sawtooth signal is supplied to the emitter of Q811 and is mixed with the video signal supplied to its base. The video signal at the collector of Q811 is then supplied to grid-1 (G1) of the CRT together with the DC voltage from VR803 (BRIGHTNESS). When the white balance switch on the side of camera is set to the CHECK position, the white balance indicator signal supplied to the emitter of Q811 is also mixed with the video signal.

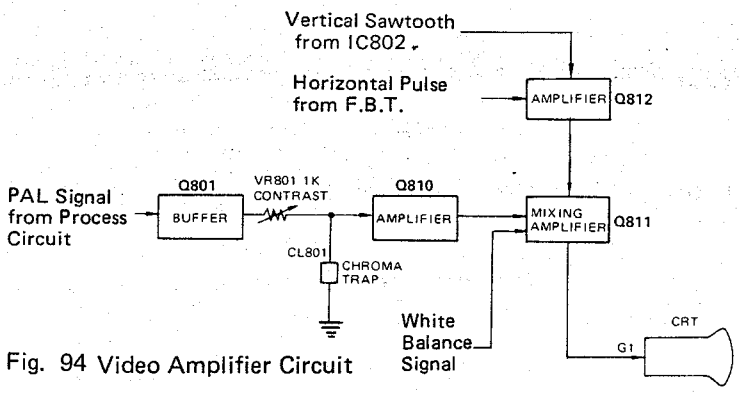

Fig. 94 Video Amplifier Circuit

5-2. Sync Separator Circuit

Outline

This circuit generates the sync pulses from the composite PAL signal supplied form the Process circuit board. It sends the horizontal sync pulses to the horizontal deflection circuit and vertical sync pulses to the vertical deflection circuit.

Details

The PAL signal from the Process circuit board (YWV3201EZK03) is supplied to sync separator Q802 via terminal No.2 of multi-pin connector CN802 and buffer Q801. Q802 detects only sync pulses of PAL signal which appear on its collector.

These separated sync pulses which contain horizontal (H) and vertical (V) sync pulses are applied to the differentiator consisting of C806 and R8006, where only the H sync pulses pass. The H sync pulses are supplied to Q804 in the H automatic frequency control (AFC) circuit in the H deflection circuit. The sync pulses at the collector of Q802 are sent via inverter Q803 to the integrator consisting of R824 and C826, where only V sync pulses are passed. The V sync pulses are applied to Q809 in the V deflection circuit.

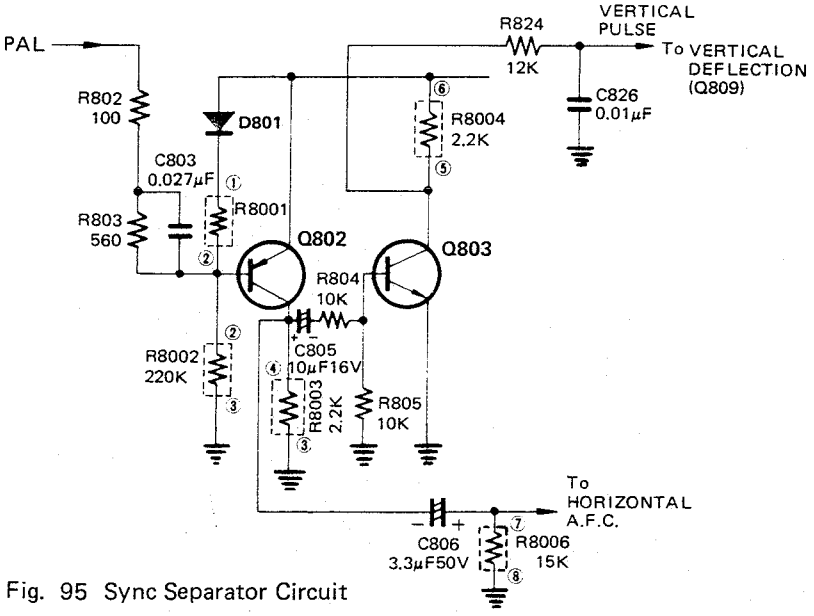

Fig. 95 Sync Separator Circuit

5-3. Vertical Deflection Circuit

Outline

This circuit generates vertical deflection sawtooth current for vertical scanning of the beam inside the CRT.

Details

The negative composite sync pulse from the collector of Q803 are supplied to the integrator circuit consisting of R824 and C826, where the H sync pulses are removed and only the V sync pulses are passed. The V sync pulses are then fed to V oscillator Q809 as trigger pulses. Q809 is a free-running sawtooth generator using a thyristor whose frequency is approx. 50Hz determined by the time constant of C827, R8051 and R8052. When the trigger pulse is supplied to Q809, Q809 generates a 50Hz sawtooth signal. The sawtooth signal at the junction point of R8051 and R8052 is then supplied to pin No. 2 of differential amplifier IC802. The amplified sawtooth signal at pin No. 5 of IC802 is fed to the V deflection coil. VR805 (V SIZE) is a control for vertical scanning size.

5-4. Horizontal Deflection Circuit

Outline

This circuit generates the horizontal deflection sawtooth current for horizontal scanning of the beam inside the CRT. This circuit contains the automatic frequency control (AFC) circuit which controls the frequency (phase) of the horizontal sawtooth current to correspond to that of horizontal sync pulse separated from the PAL signal.

Details

The H sync pulse from the sync separator circuit is applied to phase comparator consisting of Q804, D802 and D803. The positive and negative H sync pulses are obtained at the emitter and collector of Q804. The flyback pulse at the collector of Q808 is applied to the integrator consisting of R810, L802 and C810 and the H sawtooth signal is generated. The sawtooth signal is supplied to the junction point of D802 and D803, and compared with the H sync pulses in phase. The DC voltage corresponding to the phase difference is supplied to voltage controlled oscillator (VCO) IC801 via low pass filter consisting of C811, C812, R809 and Q805 to control the oscillation frequency.

If the phases (frequencies) of the sync pulse and sawtooth signal agree, D802 is energized only in the shaded part in Fig. 98 Ⓐ, and C811 is charged with current i_1 to generate a changing voltage E1 Ⓑ. D803 is energized only in the shaded part Ⓒ, and C811 is charged with current i_2 to generate a charging voltage E2 Ⓓ. i_1 and i_2 have the same current value, and i_1 flows in C811 opposite to i_2 that flows in C811 so that the charging voltages E1, E2 have the same value but opposite in polarity to each other. The detector output voltage E3 Ⓔ taken out of the crosspoint of R807 and R808 falls to zero so that VCO oscillation frequency remains unchanged.

If the phases (frequencies) of the sync pulse and sawtooth signal are different from each other, i_1 Ⓕ and i_2 Ⓗ are different so that the C811 charging voltage E1 Ⓖ by i_1 is different from the C811 charging voltage E2 Ⓘ by i_2. Therefore, the VCO oscillation frequency is changed by the voltage difference E3 Ⓙ between E1 and E2. It is in this way that the VCO is automatically controlled to match its oscillation frequency with that of the sync pulse. VR802 (H. HOLD) is a control for setting the oscillation frequency in a steady state.

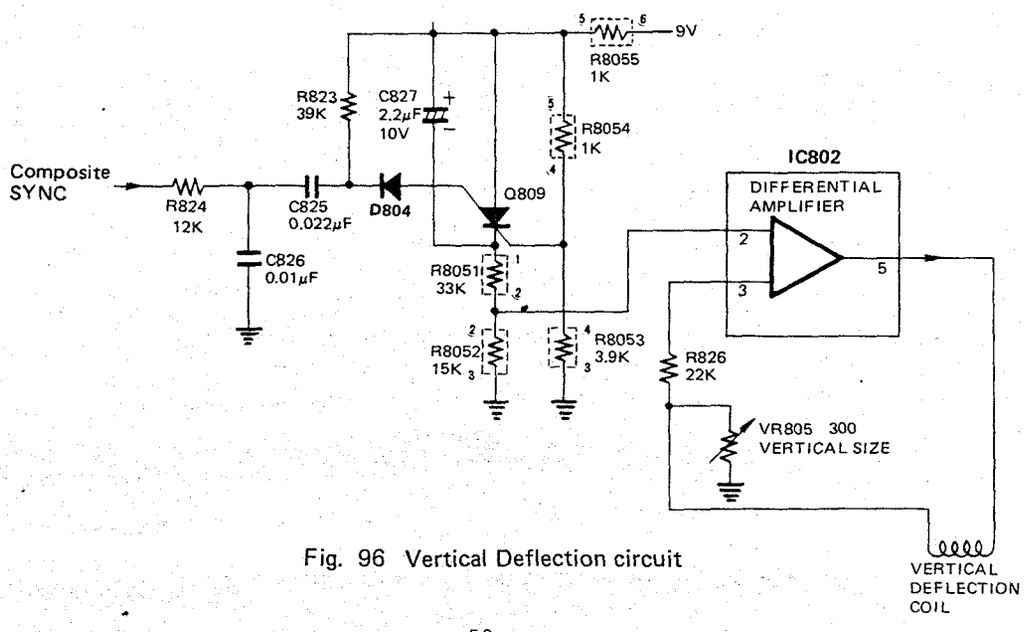

Fig. 96 Vertical Deflection circuit

The frequency cotrolled H pulse from pin No. 3 of IC801 is supplied to H deflection output Q808 through drivers Q806 and Q807. The H deflection sawtooth current is supplied to the H deflection coil from the collector of Q808 through C818 and L805 (H SIZE). L805 controls the H scanning size on the CRT. Flyback pulse obtained at the collector of Q808 is also fed to the high voltage circuit.

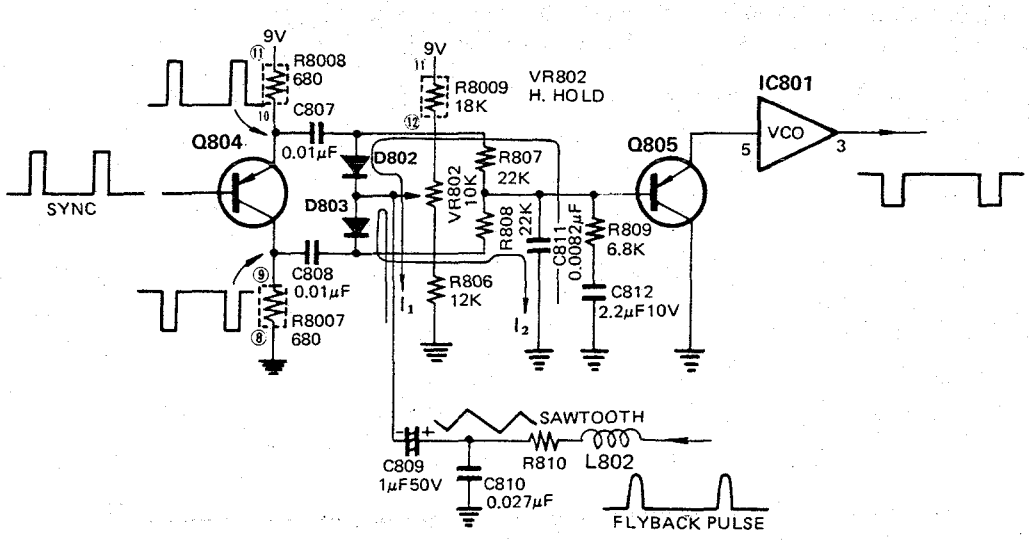

Fig. 97 AFC Circuit

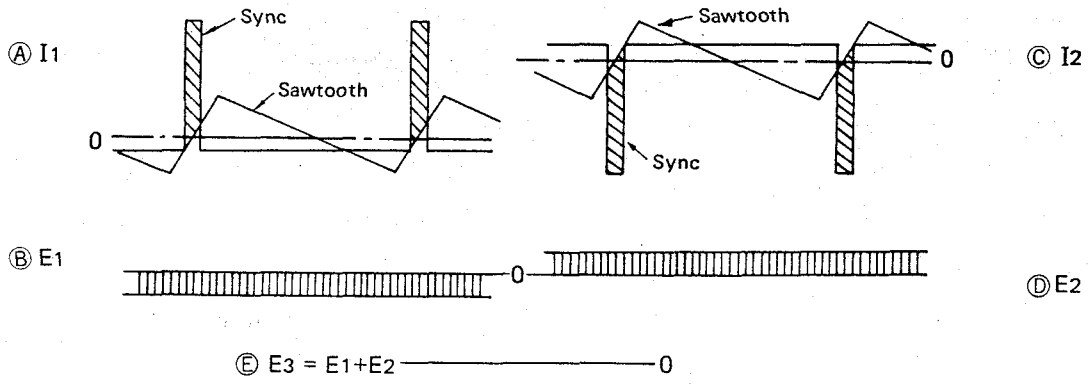

Fig. 98 Phase Comparison-1

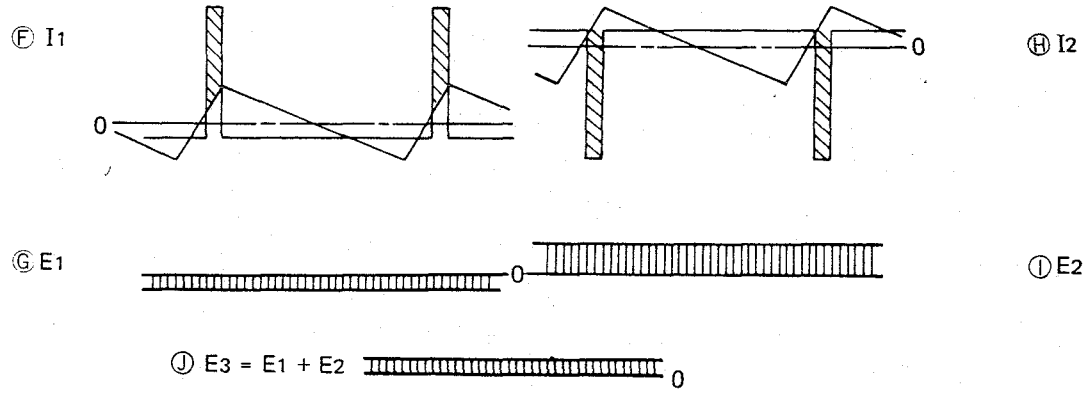

Fig. 99 Phase Comparison-2

5-5. High Voltage Circuit

Outline

This circuit generates high voltages for CRT electrodes.

Details

The flyback pulse generated in the horizontal (H) deflection circuit is supplied to the primary winding of flyback transformer (FBT) T8001 in high voltage pack T801 to step up the flyback pulse to necessary level. The boosted pulses obtained at the secondary winding of T8001 are rectified to generate high voltages.

4.5kV obtained by rectifying the boosted pulse with multiplier D8001 in T801 is supplied to the CRT anode.

+600V obtained by rectifying the boosted pulse with D8002 and C821 is supplied to grid-3 (G3) of the CRT through VR804 (FOCUS). The voltage of grid-2 (G2) is derived by splitting +600V by means of resistors. The voltage of grid-1 (G1) is derived by rectifying the negative pulse from the FBT by D8003 and C820. The rectified −55V is split by R817, R818 and VR803 (BRIGHTNESS) and supplied to G1 via VR803 together with the video signal supplied from the video amplifier circuit. The heater voltage for CRT is supplied from separate secondary winding of T8001.

5-6. White Balance/Low Light Indicator Circuit

Outline

This circuit consists of the white balance indicator circuit, low light indicator circuit and VCR remote control indicator circuit. When the camera is pointed at a white object and the white balance switch on the side of camera is set to the CHECK position, the horizontal white balance indicator bar appears on the cathode ray tube (CRT). The vertical position of horizontal white bar on the CRT indicates the condition of white balance. When white balance is set properly, the horizontal white bar falls to the lowest point on the CRT. Low light indicator LED located in front of the CRT screen lights when the light intensity is inadequate. Record indicator LED located in front of the CRT screen lights when the VCR start/stop switch is depressed and the VCR starts recording.

Details

The white balance indicator circuit operates as follows;

In the Process circuit board, the chrominance signal is rectified and converted into a DC voltage which indicates the amount of unbalance. When the white balance switch on the side of camera is set to the CHECK position, this DC voltage is supplied to pin No. 2 of comparator IC901 through the white balance drive circuit in the Deflection circuit board and terminal No. 5 of multi-pin connector CN802. The vertical sawtooth signal Ⓐ is supplied to pin No. 3 of IC901 from IC802 in the vertical deflection circuit. The DC voltage and V sawtooth signal are compared in IC901, and V pulse Ⓑ whose width is controlled by the DC voltage is generated at pin No. 1.

The V pulse Ⓑ is then applied to a switching amplifier Q901 through the differentiator consisting of C903 and R911 (Ⓒ). The V pulse Ⓓ of which phase is controlled by the DC voltage is obtained at the collector of Q901 as a white balance indicator signal. This signal is mixed with the video signal at Q811 and supplied to the CRT. When the white balance switch is set to the upper (normal) position, approx. +7V is supplied to pin No. 2 of IC901, and no V pulse is generated. Therefore, the white bar disappears from the CRT screen.

The low light indicator circuit operates as follows;

The DC voltage obtained at the collector of Q3002 of the AGC/Y signal generator IC301 in the Process circuit board is supplied to pin No. 5 of comparator IC901. This DC voltage is compared with +3V supplied to pin No. 6 of IC901. The output at pin No. 7 of IC901 is fed to the cathode of the low light indicator LED D1002.

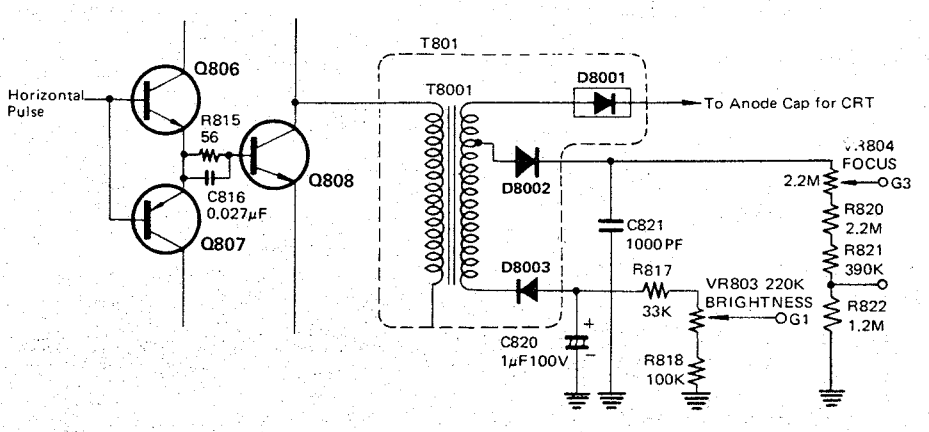

Fig. 100 High Voltage Circuit

When the camera is pointed at a normally illuminated object, the DC voltage supplied to pin No. 5 of IC901 is higher than +3V, and the output at pin No. 7 of IC901 becomes high potential to turn OFF D1002. If the illumination is insufficient, the DC voltage is lower than +3V, the output of IC901 becomes a low potential and D1002 turns ON to indicate to the camera operator that additional illumination is required.

The recording indicator circuit operates as follows;
When the VCR start/stop switch on the camera is depressed, +3V is applied to D1001 anode from the VCR remote control circuit in the Deflection circuit board to light the D1001.
This indicates to the camera operator that the VCR is recording.

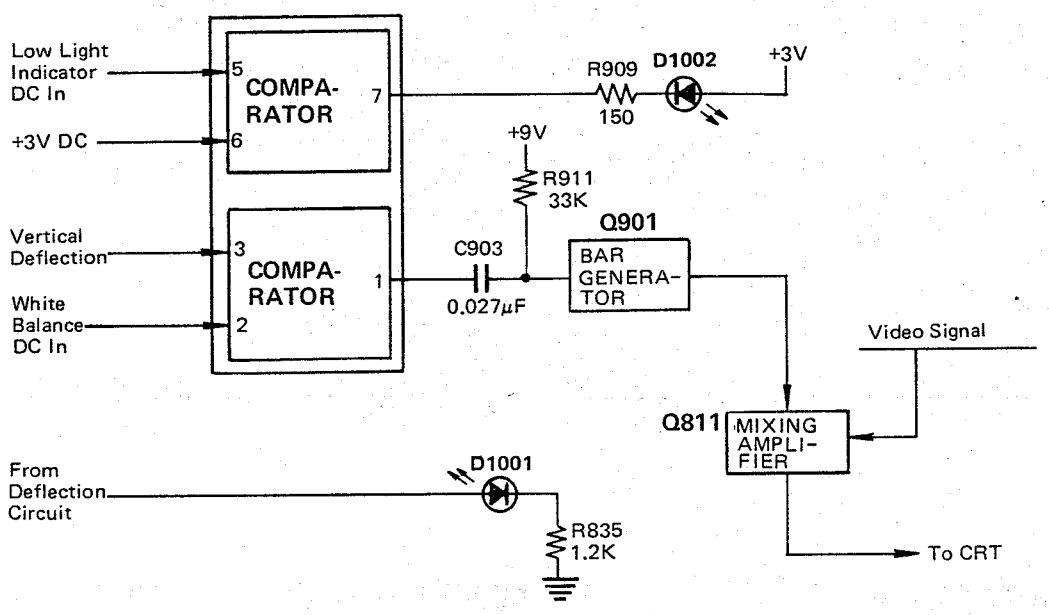

Fig. 101 White Balance/Low Light Indicator Circuit

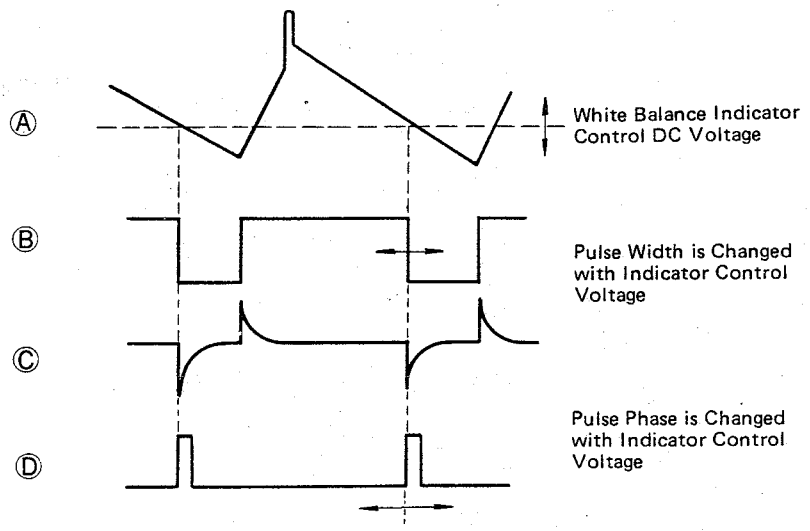

Fig. 102 White Balance Indicator Signal

Printed in Japan
B—221

ORDER NO. AVD-8005-524

Service Manual

Vol. 2

Adjustment Procedures

Colour Video Cameras

WV-3200N/WV-3200E

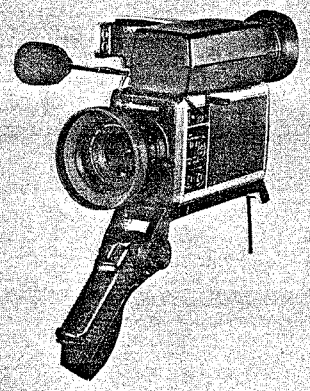

WV-3200N/WV-3200E

CONTENTS

1. TEST EQUIPMENT REQUIRED 1
2. DISASSEMBLING PROCEDURE 1
   - 2-1. Camera 1
   - 2-2. Electronic Viewfinder 3
   - 2-3. Power Supply 4
3. VIDICON REPLACEMENT 5
4. DEFLECTION COIL REPLACEMENT 7
5. INFRARED CUT FILTER AND CRYSTAL FILTER REPLACEMENT 8
6. ADJUSTMENT PROCEDURE 8
   - 6-1. Connection and Setting Up for Adjustment 8
   - 6-2. Power Supply Adjustment 9
   - 6-3. Sync Circuit Adjustment 9
   - 6-4. Camera Unit Adjustment 9
   - 6-5. Electronic Viewfinder Adjustment 22
7. LENS REPLACEMENT 24
8. OPTICAL MECHANISM REPLACEMENT 24
   - 8-1. Lens Mount Ring Replacement 24
   - 8-2. Power Zoom Motor Assembly Replacement 24
   - 8-3. Power Zoom Control Replacement 26
   - 8-4. Switch Board Assembly Replacement 26
   - 8-5. Auto Iris Mechanism Assembly Replacement 27

LOCATION OF TEST POINTS AND ADJUSTING CONTROLS
- Viewfinder Circuit Board 23
- Deflection Circuit Board 25
- Process Circuit Board 25

National/Panasonic

Matsushita Electric Trading Co., Ltd.
P.O. Box 288, Central Osaka Japan

1. TEST EQUIPMENT REQUIRED

The following equipment is required for adjustment of WV-3200N/E color camera.

- Oscilloscope
  (dual trace, delayed, 25MHz bandwidth, with three proves, one must be 1:1)
- Digital voltmeter (DVM)
- Frequency counter
- Vectorscope
- Color video monitor
- Monochrome underscaned monitor
- Tripod
- Lighting [140 footcandles (1400 lux), 3200°K]
- Logarithmic gray scale chart (Part No. YWV2310-RB99)

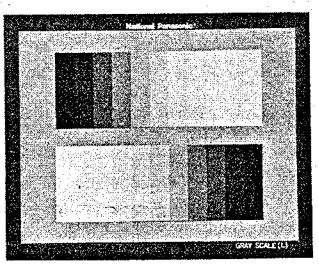

- Color chart (Part No. YWV2100RB98)

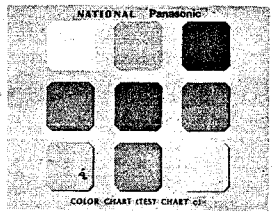

- Ball chart (Part No. YWV2100RB03)

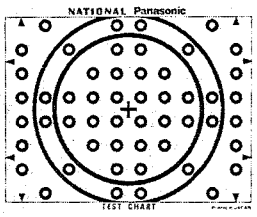

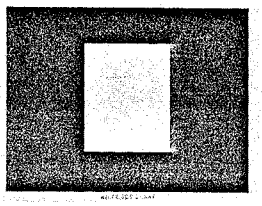

- Iris setting jig (Part No. YWCC003X01)

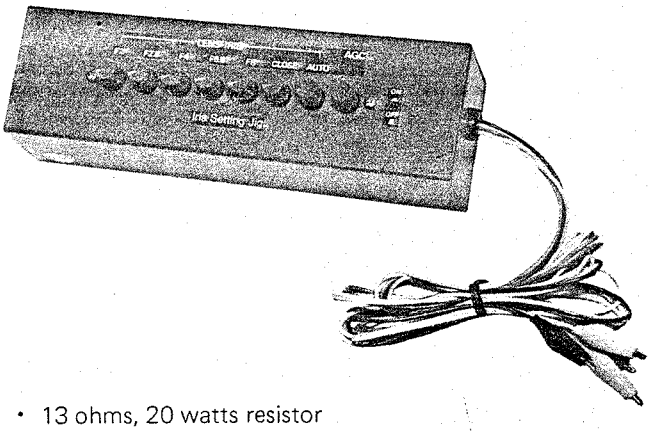

- 13 ohms, 20 watts resistor
- BNC-RCA adaptor (Standard accessory, Part No. YWRCAMBNCFA)

2. DISASSEMBLING PROCEDURE

2-1. Camera

- Turn the power off.
- Remove the four screws holding the hand grip and disconnect the remote control plug from the camera.

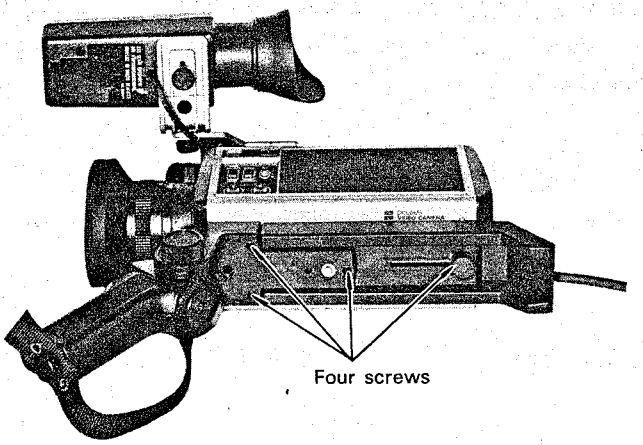

Fig. 2-1-1

- Disconnect the viewfinder connector from the camera.
- Remove the two screws on the top, and remove the viewfinder unit with the viewfinder mounting bracket.

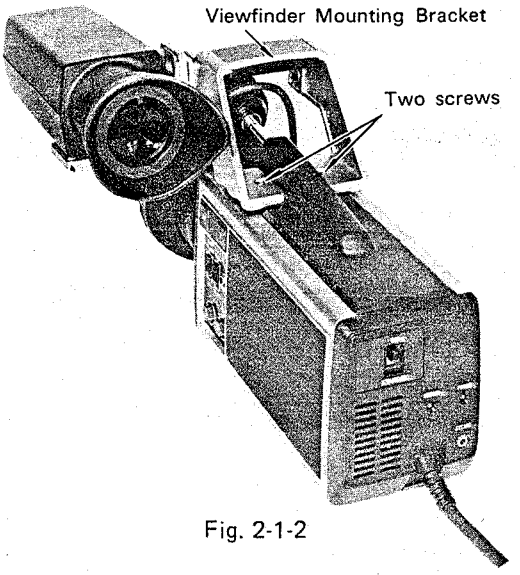

Fig. 2-1-2

- Carefully lift up the front portion of boom microphone cover. (Fig. 2-1-3)

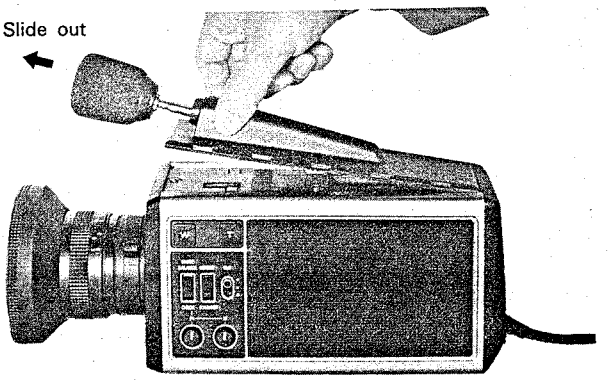

Fig. 2-1-3

- Slide out a little the boom microphone cover forward with care until it unlocks from the rear cover (Fig.2-1-3) and disconnect the boom microphone connector. (Fig. 2-1-4)

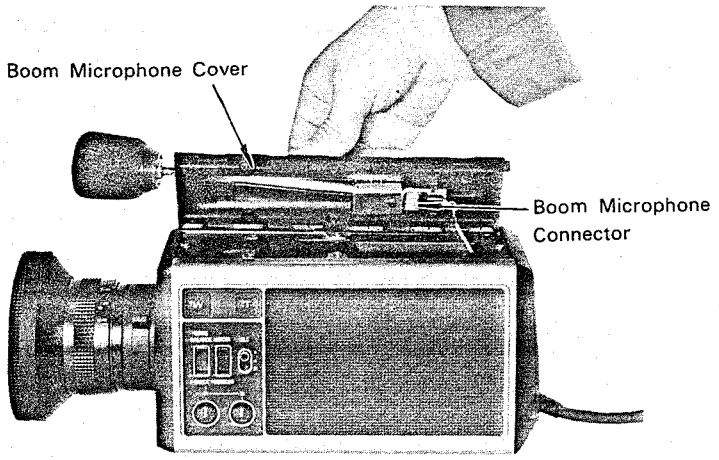

Fig. 2-1-4

- Remove the two screws on the top inner plate which secure the both side covers. (Fig. 2-1-5)

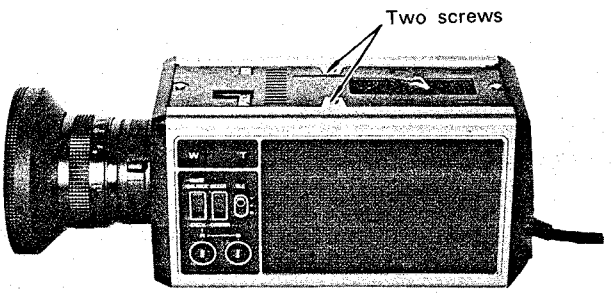

Fig. 2-1-5

- Loosen the two screws on the bottom holding the bottom edges. (Fig. 2-1-6)
- Both side covers may be removed by pulling outward.

  Note: When reinstalling the covers, the left side cover (viewed from the front) should be mounted first.

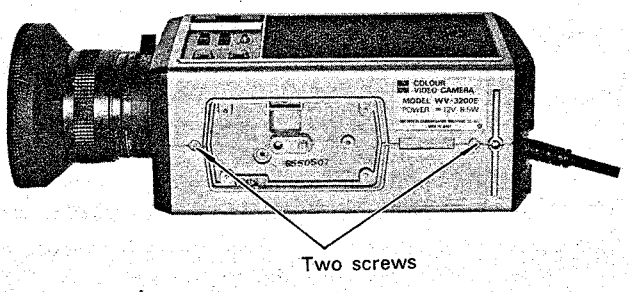

Fig. 2-1-6

- Remove the two screws which hold the top inner plate, and remove the plate.

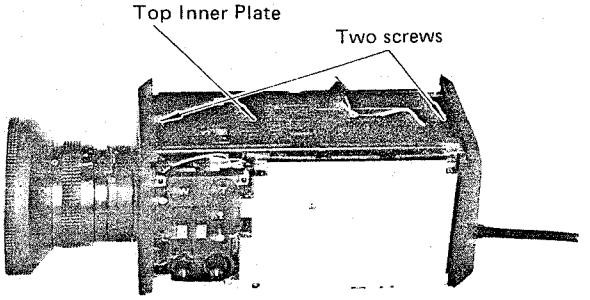

Fig. 2-1-7

- Remove the two screws which hold the printed circuit board (PCB) in order to gain access to the desired circuitry.

(A) For left side PCB (YWV3201EZK03)
Process Circuit Board

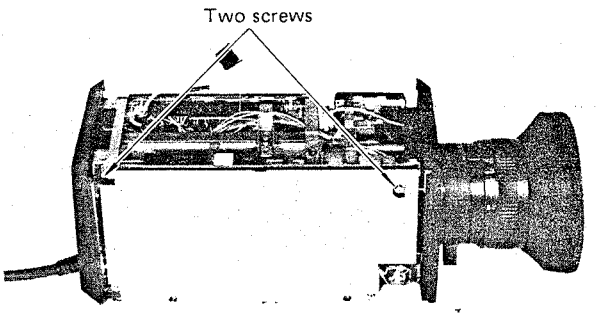

Fig. 2-1-8

(B) For right side PCB (YWV3201EZK02)
Deflection Circuit Board

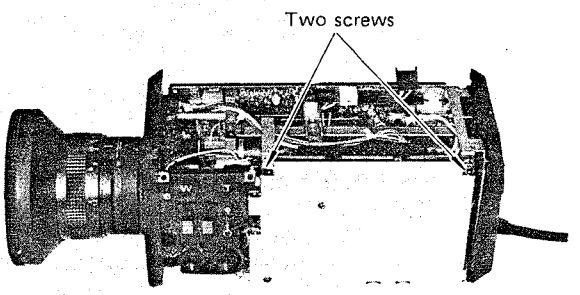

Fig. 2-1-9

- Disconnect the viewfinder connector CN204 from the PCB.

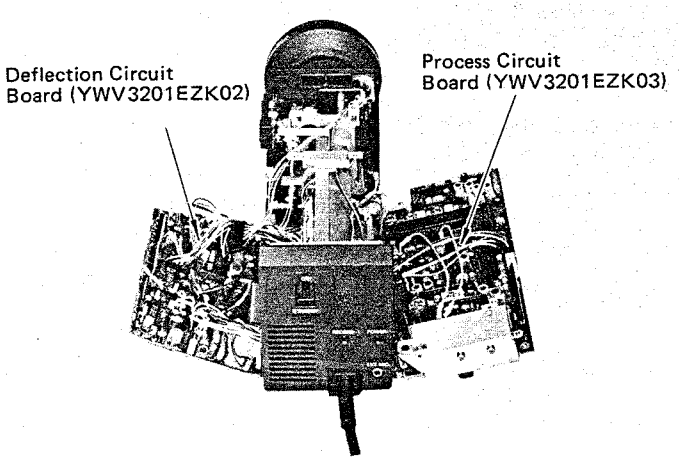

Fig. 2-1-10

2-2. Electronic Viewfinder

- Disconnect the viewfinder connector from camera. (Fig. 2-2-1)
- Loosen the viewfinder joint knob and remove the viewfinder from the viewfinder mounting bracket. (Fig. 2-2-2)

  Note: The viewfinder can be disassembled without removing it from the camera.

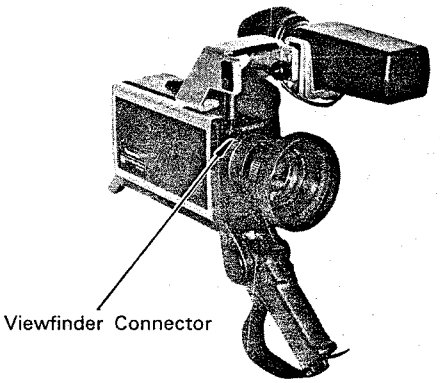

Fig. 2-2-1

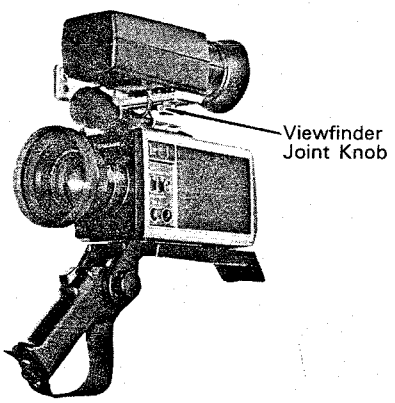

Fig. 2-2-2

- Remove the eye cap by pulling it.
- Unscrew the viewfinder-lens holding ring, and remove the ring and viewfinder-lens.

  Note: Unscrew the viewfinder-lens holding ring with care since the viewfinder-lens may fall out as the ring is removed.
- Remove one screw on the bottom, and remove the top cover.

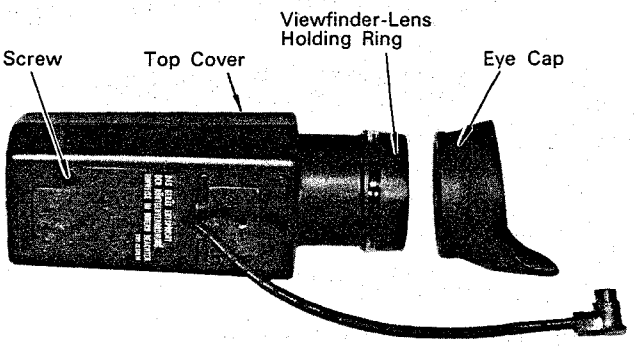

Fig. 2-2-3

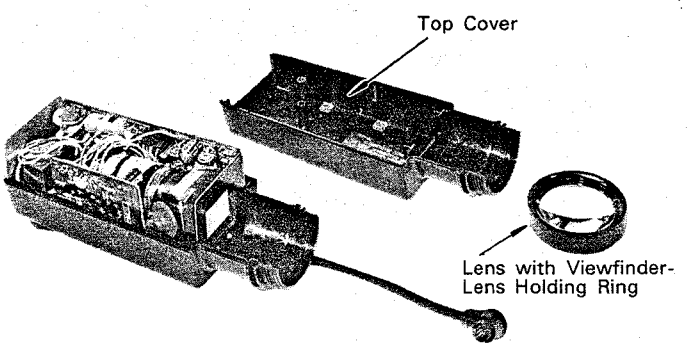

Fig. 2-2-4

2-3. Power Supply

- Remove two screws on the bottom, and remove the top cover.

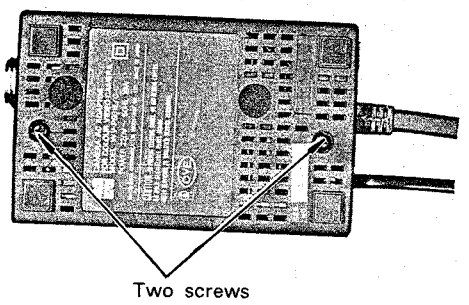

Fig. 2-3-1

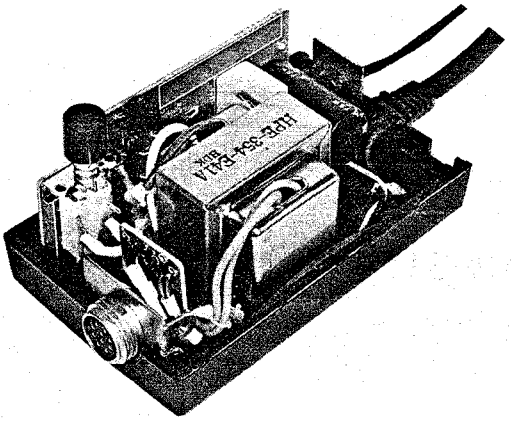

Fig. 2-3-2

3. VIDICON REPLACEMENT

- Disassemble the camera as described in Section 2. "DISASSEMBLING PROCEDURE" on page 1.
- Remove the two screws which hold the shield plate and preamplifier circuit board. (Fig. 3-1)
- Unsolder the shield plate of preamplifier from the deflection coil. (Fig. 3-1)

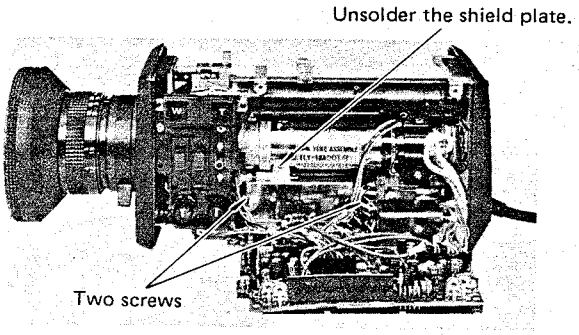

Fig. 3-1

- Remove the shield plate and unsolder target lead. (Fig. 3-2)
- Disconnect the deflection coil connector from the PCB, and remove the one screw which holds the vidicon socket ground lead on the chassis. (Fig. 3-2)

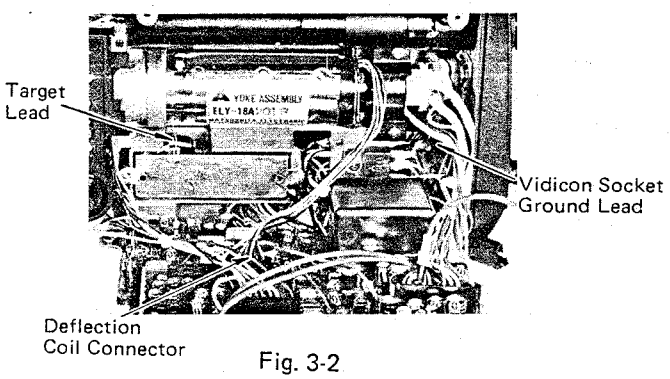

Fig. 3-2

- Loosen the one screw which holds the coil guide.

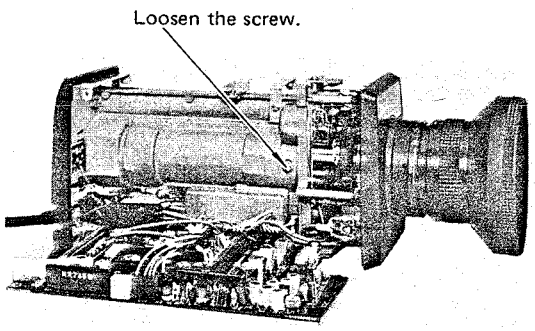

Fig. 3-3

- Remove the two screws on the deflection coil holder, and remove the holder from the chassis by lifting it a little toward the deflection circuit board. (Fig. 3-4)

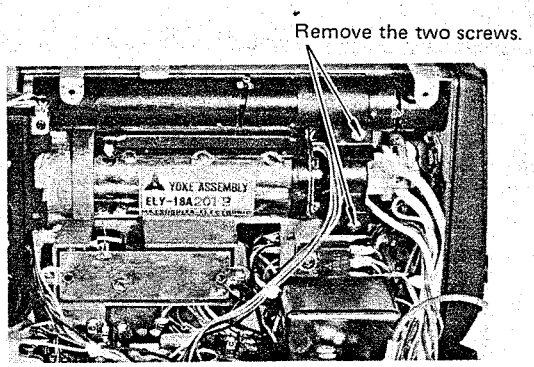

Fig. 3-4

- Remove the deflection coil, together with the deflection coil holder, from the chassis by pulling it backward. (Fig. 3-5)
- Pull off the vidicon socket, and remove the deflection coil holder and coil guide from the deflection coil. (Fig. 3-6)

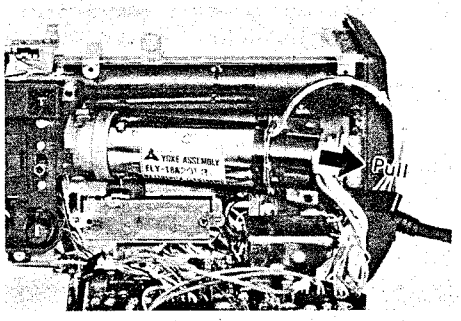

Fig. 3-5

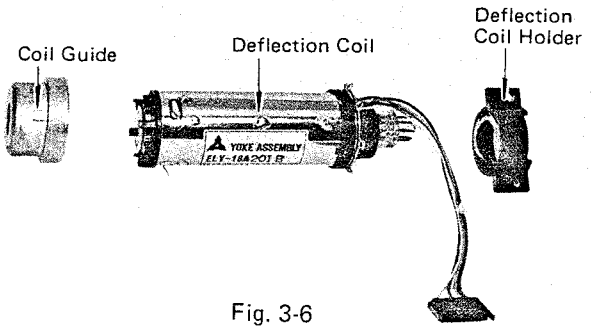

Fig. 3-6

- Loosen the vidicon holding screw and push the vidicon out (in the direction of the lens). (Fig. 3-7)

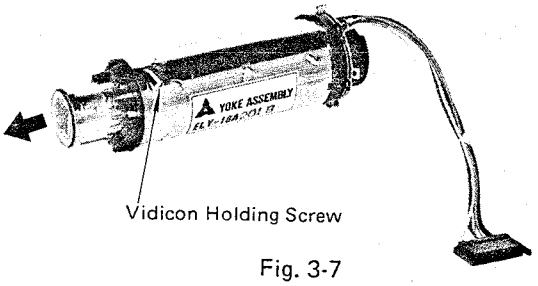

Fig. 3-7

- Insert the new vidicon (Part No. S4094P) into the deflection coil and push it completely until it stops.

  Note: Store the vidicon in a dark place. When inserting it in place, be careful not to expose the target directly to bright light.

Make sure that the vidicon is oriented in the correct direction, i.e., the optical black on the vidicon is on the right and perpendicular to the horizontal line between the centers of the protruding pins of deflection coil when the target lead is positioned at the bottom side as shown in Fig. 3-8.

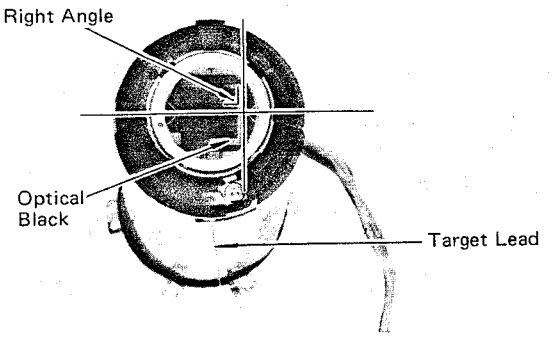

Fig. 3-8

- Tighten the vidicon holding screw to secure the vidicon in place. (Fig. 3-9)
- Clean the vidicon faceplate with the lens cleaning tissue or cloth.
- Push the coil guide onto the deflection coil.
  Make sure that the protruding part of the coil guide is in line with the protruding part of deflection coil.

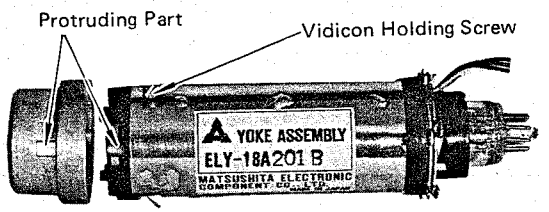

Fig. 3-9

- Insert the hold spring in the deflection coil holder while matching the guides on them. (Fig. 3-10)

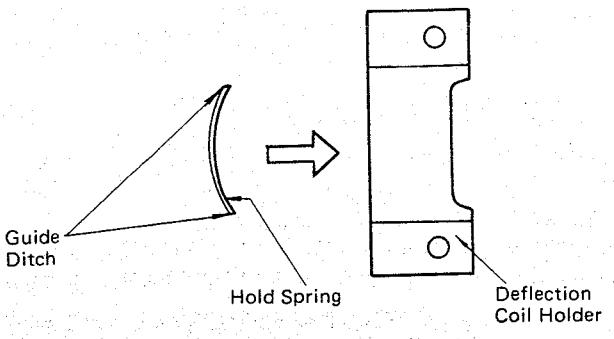

Fig. 3-10

- Attach the deflection coil holder with the hold spring to the deflection coil while matching the guides on them. (Fig. 3-11)

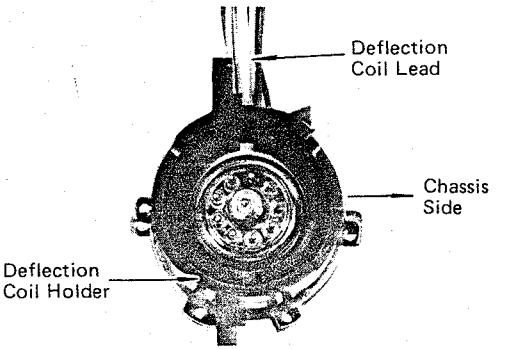

View from the rear when the deflection coil leads are positioned at top.

Fig. 3-11

- Install the vidicon socket.
- Install the deflection coil into the chassis while holding the deflection coil holder. Note that the target lead has to be positioned downward. (Fig. 3-12)

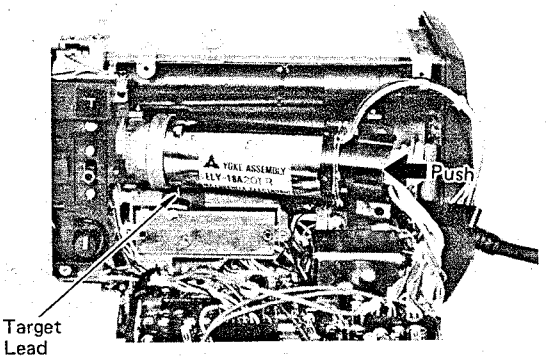

Fig. 3-12

- While pushing the deflection coil holder forward (in the direction of the lens), push the holder toward the chassis until it locks. When the deflection coil holder is locked, the holder will not move backward unless it is lifted.

  Note: 1. Make sure that the recessed part of the chassis engages the protruding part of coil guide.
  2. Make sure that the recessed part of the deflection coil holder engages the protruding part of the chassis.

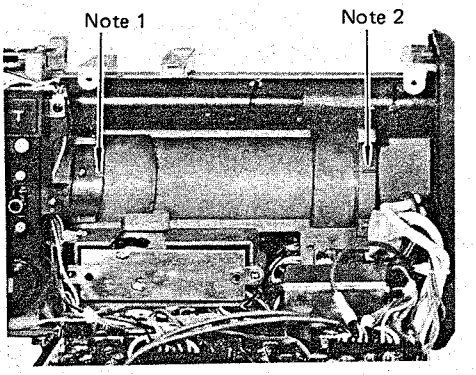

Fig. 3-13

- Secure the deflection coil holder by installing the two screws (Fig. 3-14) while holding it to the chassis.

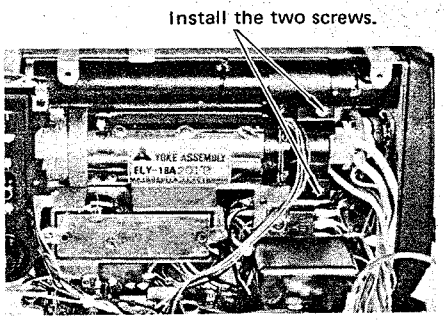

Fig. 3-14

- Secure the coil guide by tightening the screw which locks its position. (Fig. 3-15)

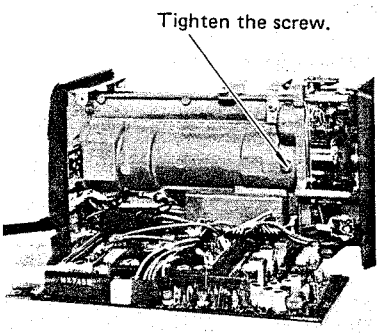

Fig. 3-15

- Install the vidicon socket ground lead on the chassis with the one screw.
- Assure that the vidicon socket is seated on the vidicon, and connect the deflection coil connector to the deflection circuit board.
- Solder the target lead, and attach the preamplifier circuit board and its shield plate with the two screws. Solder the shield plate as it was originally.
- After replacing the vidicon, adjust the camera according to Section 6 "ADJUSTMENT PROCEDURE" on page 8.

4. DEFLECTION COIL REPLACEMENT

- The procedure for the deflection coil replacement is very similar to that for vidicon replacement.
- Take out the deflection coil from the chassis while referring to Section 3 "VIDICON REPLACEMENT" on page 5.
- Loosen the vidicon holding screw and push the vidicon out (in the direction of the lens). (Fig. 4-1)

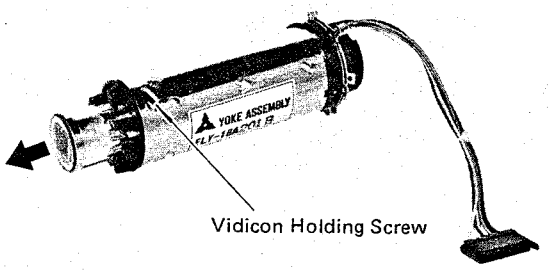

Fig. 4-1

- Insert the vidicon into the new deflection coil and push it completely until it stops.
  Note: When inserting the vidicon in place, be careful not to expose the target to direct light.
- Make sure that the vidicon is oriented in the correct direction i.e., the optical black on the vidicon is on the right and perpendicular to the horizontal line between the centers of the protruding parts of deflection coil when the target lead is positioned at the bottom, as shown in Fig. 4-2.

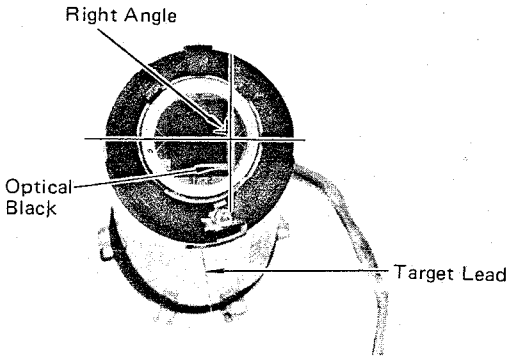

Fig. 4-2

- After tightening the vidicon holding screw to secure the vidicon in place, install the deflection coil as described in Section 3 "VIDICON REPLACEMENT" on page 5.
- After installing the vidicon and deflection coil assembly, adjust the camera according to Section 6 "ADJUSTMENT PROCEDURE" on page 8.

5. INFRARED CUT FILTER AND CRYSTAL FILTER REPLACEMENT

- Take out the deflection coil from the chassis as described in Section 3 "VIDICON REPLACEMENT" on page 5.

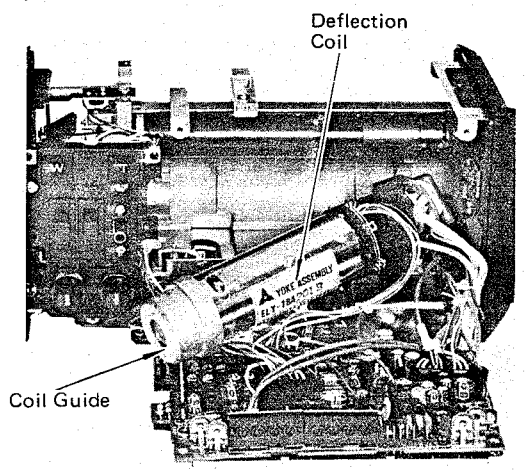

Fig. 5-1

- Remove the coil guide from the deflection coil.
- Remove the two screws on the coil guide to allow disassembly as shown in Fig. 5-2.

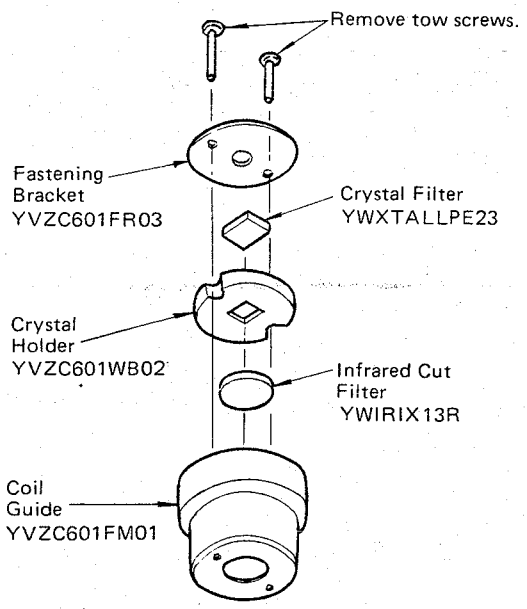

Fig. 5-2

- Replace the defective filter with a new one, and assemble the coil guide in the reverse order.
- Install the coil guide onto the deflection coil observing the alignment as shown in Fig. 3-9.
- Install the deflection coil in which the vidicon is inserted as described in Section 3 "VIDICON REPLACEMENT" on page 5.
- After installing the deflection coil assembly, confirm step (f), "Backfocus adjustment" on page 11.

6. ADJUSTMENT PROCEDURE

6-1. Connection and Setting Up for Adjustment

- Disassemble the camera as previously described.

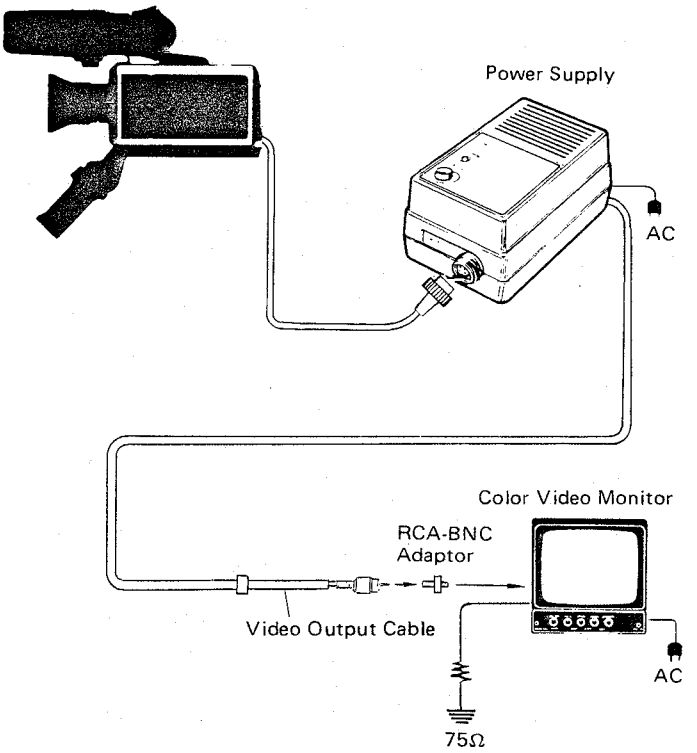

Fig. 6-1-1

■ Connection

- Connect the camera cable from the camera to the power supply.
- Connect the video cable from the power supply to the color monitor.
- Terminate the color monitor video input in 75 ohms.

■ Setting up

- Turn on the color camera for at least 30 minutes prior to adjustment.
- Light: 140 footcandles (1400 lux)
- Test Charts: Logarithmic gray scale chart (YWV2310-RB99), color chart (YWV2100RB98), flat white chart and ball chart (YWV2100RB03).

■ Position of controls and switches on the camera

- Set the controls and switches on the camera as follows;

R and B gain controls	Center detent position
White balance switch	Upper position
Indoor/outdoor selection switch	Indoor position
Back light correction (BLC) switch	Center position

Note: TP in this manual refers to a test point on the circuit board.

Steps denoted by shaded outlines do not have to be performed if only vidicon is replaced.

6-2. Power Supply Adjustment

Note: If a complete alignment is to be performed, adjust the power supply first. If only a portion of the procedure is to be done, check the power supply voltage, but do not adjust unless it is in gross error (±0.1 V).

- Refer to page 25 for the test points and adjusting controls.

(a) +9V adjustment

Test points	: TP203 (+9V)	Deflection Board
	TP209 (GROUND)	" "
Adjust	: VR219 (9V ADJUST)	" "
	VR220 (CURRENT LIMITER)	"

- Connect the DVM probe to TP203 and TP209 (GROUND).
- Turn CURRENT LIMITER VR220 fully counterclockwise.
- Adjust 9V SET VR219 for 9V ± 0.02V.

(b) Current limiter adjustment

Test points	: TP203 (+9V)	Deflection Board
	TP209 (GROUND)	" "
Adjust	: VR220 (CURRENT LIMITER)	"

- Connect the DVM probe to TP203 and TP209 (GROUND).
- Connect a dummy resistor (13 Ohms 20W) between TP203 and TP209 (GROUND).
- Note the voltage at TP203.
- Turn CURRENT LIMITER VR220 back until the voltage at TP203 becomes 0.02V below the noted voltage.

6-3. Sync Circuit Adjustment

- Refer to page 25 for the test points and adjusting controls.

(a) 4.43MHz adjustment

Test point	: TP312 (SC)	Process Board
Adjust	: VC302 (4.43MHz ADJ)	" "

- Connect the frequency counter to TP312.
- Adjust 4.43MHz ADJ VC302 for 4.433618MHz ± 10Hz.

(b) VCO voltage adjustment

Test point	: TP317 (VCO)	Process Board
Adjust	: L321 (VCO VOLTAGE ADJ)	" "

- Connect the DVM probe to TP317.
- Adjust VCO VOLTAGE ADJ L321 for 4 ± 0.5V.

6-4. Camera Unit Adjustment

- Refer to page 25 for the test points and adjusting controls.

(a) Beam alignment coarse adjustment

Test points	: TP307 (B)	Process Board
	TP308 (R)	" "
	TP203 (+9V)	Deflection Board
	TP207 (AIC CONT-2)	" "
	TP210 (+3V)	" "
	TP211 (AGC CONT)	" "
Adjust	: VR203 (FOCUS)	" "
	Alignment magnets	Coil Assembly

- Disconnect the pin connector J207 on the deflection board.
- Connect the four clips from the iris setting jig (YWCC-003X01) to the test points as follows.

  Red clip TP203
  Yellow clip TP207
  White clip TP210
  Green clip TP211

- Set the AGC switch on the iris setting jig to the OFF position, and the lens iris switch to F4.
- Aim the camera at the white chart.
- If a horizontal magenta bar is observed on the monitor, turn H. CENTERING VR224 clockwise until the bar disappears.
- Connect the oscilloscope to TP307(B) and TP308(R).
- Trigger the oscilloscope at H. rate. (Use TP201 on deflection board, or TP314 on process board.)
- Turn DYNAMIC FOCUS VR214, VR215, VR216 and VR217 to the mechanical center.
- Also turn SIGNAL SHADING VR204 through VR211 to their mechanical center.
- Adjust FOCUS VR203 so that the center portion of B and R signal waveforms at TP307 and TP308 become maximum. (Fig. 6-4-1)

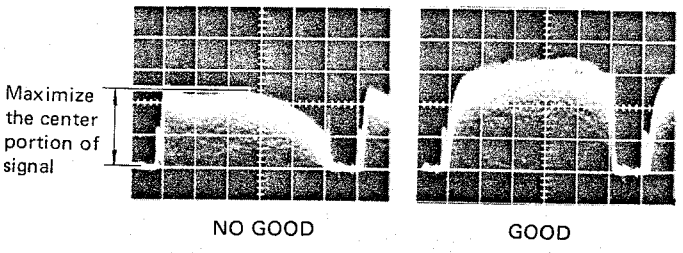

Fig. 6-4-1

- While watching the R and B signals on the oscilloscope, rotate the alignment magnets (see Fig. 6-4-2) and stop when the waveform peaks of R and B signals are same in phase and maximum in amplitude. (see Fig. 6-4-3)

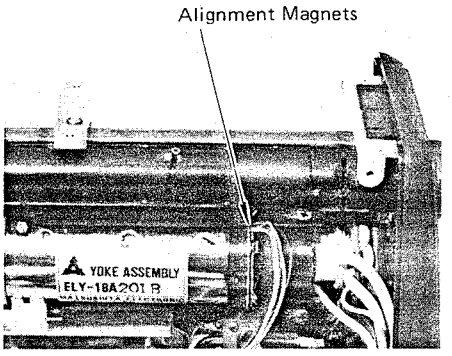

Fig. 6-4-2

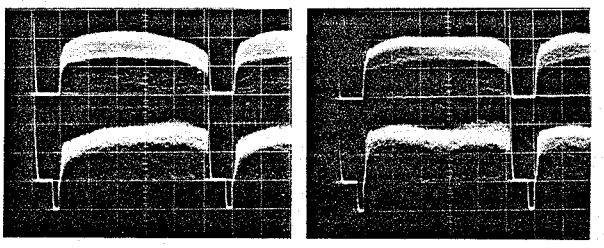

NO GOOD GOOD

Fig. 6-4-3

- Confirm that the R and B signal waveforms change similarly while turning FOCUS VR203. If not, readjust beam alignment.

(b) Dark current setting

Test point	: TP301 (PRE VIDEO)	Process Board
Adjust	: VR221 (TARGET)	Deflection Board

- Keep the iris setting jig connected as in the preceding step.
- Set the AGC switch on the iris setting jig to the OFF position, and the lens iris switch to CLOSE. Allow 5 minutes with lens closed.
- Connect a 1:1 probe to TP301.
- Trigger the oscilloscope at V. rate. (Use TP202 on deflection board, or TP316 on process board.)
- Adjust TARGET VR221 for 50mV. (Fig. 6-4-4)

  Note: If there is signal shading, adjust the level at the center of the waveform.

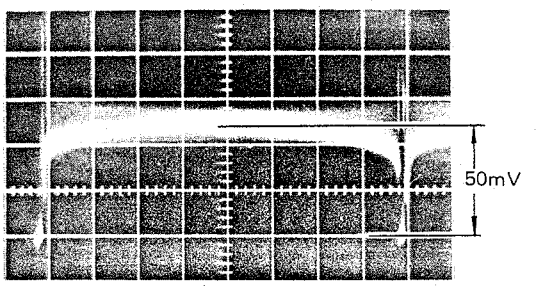

Fig. 6-4-4

(c) Focus coarse adjustment

Adjust	: VR203 (FOCUS)	Deflection Board
Observe	: Color monitor	

- Keep the iris setting jig connected as in the preceding step.
- Set the AGC switch to the OFF position and the lens iris to F2.8.
- Aim the camera at the white chart.
- Observe the color monitor, and adjust FOCUS VR203 for minimum green tint in the center and maximum magenta (red) throughout the picture area.
- If a bright green area appears at the corner of the monitor, readjust the beam alignment. Refer to (a) "Beam alignment coarse adjustment" on page 9.
- If green tinted areas still remain after repeating the beam alignment, they will be minimized by the dynamic focus and shading adjustments which follow.

(d) Beam current adjustment

Test point	: TP301 (PRE VIDEO)	Process Board
Adjust	: VR202 (BEAM)	Deflection Board

- Keep the iris setting Jig connected as in the preceding step.
- Set the AGC switch to the OFF position and the lens iris to F2.
- Aim the camera at a high intensity object.
- Connect the oscilloscope to TP301.
- Trigger the oscilloscope at H. rate. (Use TP201 on deflection board, or TP314 on process board.)
- Adjust BEAM VR202 until the waveform is clipped at 2.4Vp-p. (see Fig. 6-4-5)

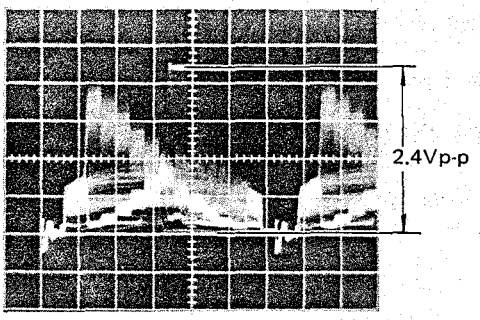

Fig. 6-4-5

(e) Vidicon rotation adjustment

Test point	: TP305 (Rc/Bc)	Process Board
Adjust	: Vidicon rotation	

- Keep the iris setting jig connected as in the preceding step.
- Set the AGC switch to the OFF position and the lens iris to F2.8.
- Aim the camera at the white chart.
- Connect the oscilloscope to TP305.
- Trigger the oscilloscope at V. rate. (Use TP202 on deflection board, or TP316 on process board.)
- Use the delayed sweep mode to line-select 2H periods from the center of the waveform. (see Fig. 6-4-6)

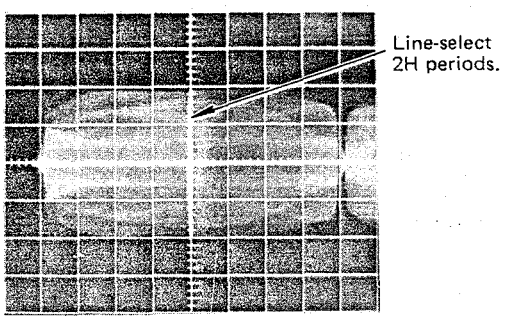

Fig. 6-4-6

- Loosen the vidicon holding screw. (see Fig. 6-4-7)

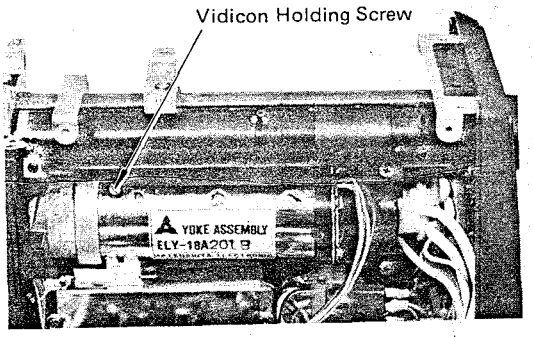

Fig. 6-4-7

- Rotate the vidicon by means of the vidicon socket board (Fig. 6-4-8) (CAUTION, DC1600V) and stop at the point where the waveform becomes as flat as possible. (Fig. 6-4-9)
  Ideally, the waveform should show one flat envelope of lesser amplitude and one of greater amplitude, each with a period of 1H.

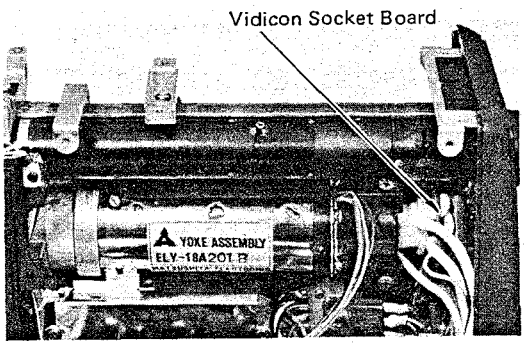

Fig. 6-4-8

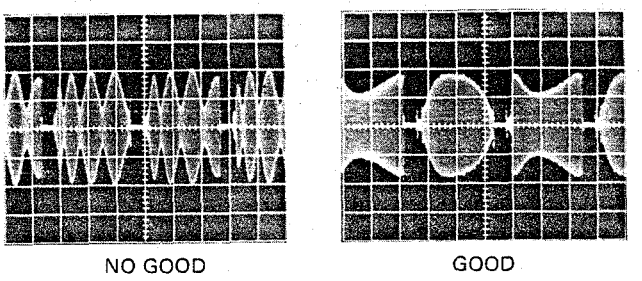

Fig. 6-4-9

- Carefully tighten the vidicon holding screw and make sure that the waveform remains properly adjusted.

(f) Backfocus adjustment

Adjust	: Backfocus adjusting ring
Observe	: Color monitor

- Keep the iris setting jig connected as in the preceding step.
- Aim the camera at an object further than 6 feet (2m) from the camera.
- Set the AGC switch to the OFF position and the lens iris to F2.
- Zoom in (close up) and adjust the lens focus.
- Zoom out (wide angle) and adjust the focus by turning the backfocus adjusting ring located on the front side of the camera. (Fig. 6-4-10)

- Zoom in again and adjust the focus by turning the lens focus.
- Zoom out again and adjust the focus by turning the backfocus adjusting ring.
- Repeat this procedure until the focus tracks throughout the zoom range.

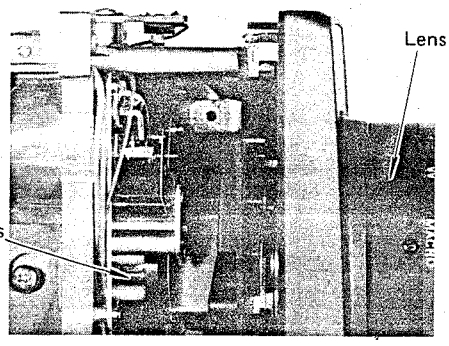

Fig. 6-4-10

(g) Horizontal size, horizontal linearity and vertical size adjustment

Test points	: TP303 (Y_H-1)	Process Board
	TP305 (Rc/Bc)	" "
Adjusts	: VR222 (H. SIZE)	Deflection Board
	VR223 (H. LINEALITY)	" "
	VR225 (V. SIZE)	" "

- Keep the iris setting jig connected as in the preceding step.
- Set the AGC switch to the OFF position and the lens iris to F2.8.
- Aim the camera at the white chart.
- Connect the oscilloscope to TP303.
- Trigger the oscilloscope at H. rate. (Use TP201 on deflection board, or TP314 on process board.)
- Adjust H. SIZE VR222 so that the carrier(3.58MHz) on the Y signal at TP303 is minimum. (Fig. 6-4-11)

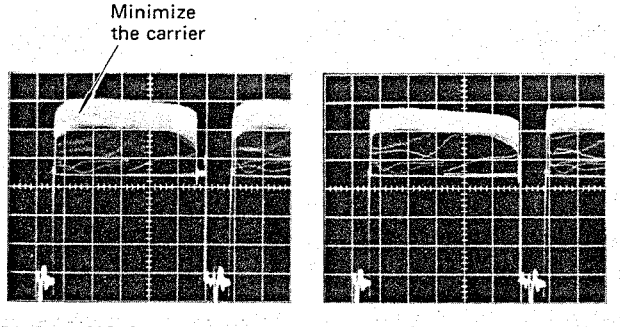

NO GOOD GOOD

Fig. 6-4-11

- Adjust H. LINEARITY VR223 so that the carrier (3.58MHz) on the starting portion of Y signal at TP303 is minimum (Fig. 6-4-12), and the starting portion of Y signal becomes as flat as possible.
  At this time, the picture will have minimum disturbance (color shading) on the left side on the color monitor.

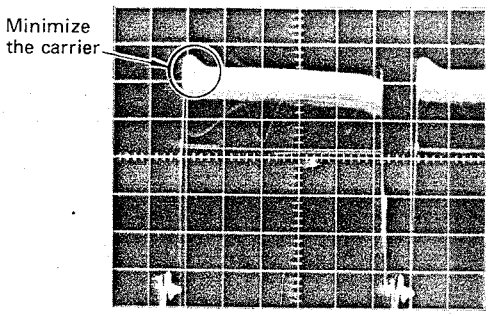

Fig. 6-4-12

- Repeat adjusting VR222 and VR223 until the carrier on the Y signal is minimum, the starting portion of Y signal is flat and the picture has minimum disturbance on the left side.
- Connect the oscilloscope to TP305.
- Trigger the oscilloscope at V. rate. (Use TP202 on the deflection board, or TP316 on process board.)
- Adjust V. SIZE VR225 for minimum beat during the vertical period. (Fig. 6-4-13)
  Ideal condition is no beat, but one beat or envelope crossover is practical.

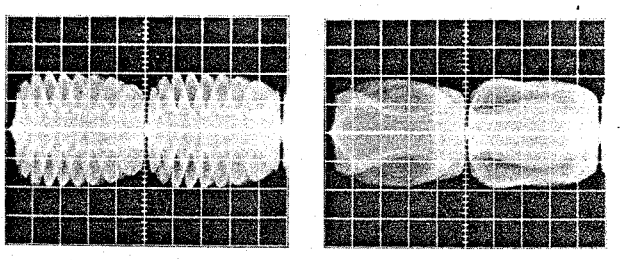

NO GOOD GOOD

Fig. 6-4-13

(h) Beam alignment readjustment

- Repeat the adjustment described in step 6-4-(a) on page 9 more carefully.

(i) Vertical centering adjustment

Test point	: TP301 (PRE VIDEO)	Process Board
Adjust	: VR226 (V. CENTERING)	Deflection Board
	VR224 (H. CENTERING)	" "

- Aim the camera at the white chart.
- Set the AGC switch to the OFF position and lens iris to F2.8.
- Turn H. CENTERING VR224 fully counterclockwise. Note that the optical black clamp may disturb the picture.
- Connect the oscilloscope to TP301.
- Trigger the oscilloscope at V. rate. (Use TP202 on deflection board, or TP316 on process board.)
- While observing the waveform, adjust V. CENTERING VR226 so that the marker which shows the vertical center of vidicon positions at the center of video signal waveform. (Fig. 6-4-14)

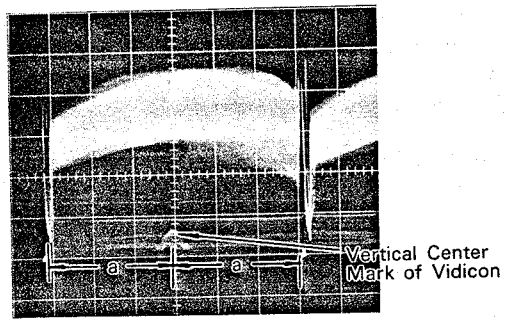

Fig. 6-4-14

(j) Horizontal centering adjustment

Test point	: TP301 (PRE VIDEO)	Process Board
Adjust	: VR224 (H. CENTERING)	Deflection Board

- Keep the iris setting jig connected as in the preceding step.
- Set the AGC switch to the OFF position and the lens iris to F2.8.
- Aim the camera at white chart
- Connect the oscilloscope to TP301.
- Trigger the oscilloscope at H. rate. (Use TP201 on deflection board, or TP314 on process board.)
- Expand the horizontal blanking period on the oscilloscope.
- Adjust H. CENTERING VR224 until the optical black width is 3.5μs (Fig. 6-4-15). If the falling edge of the waveform corresponding to the picture area is noisy, adjust for the middle.

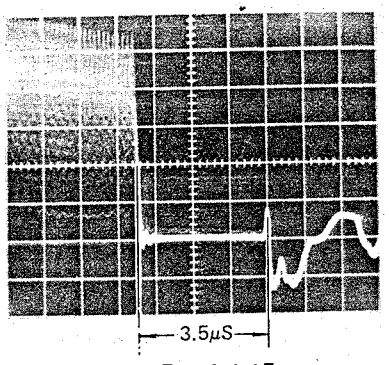

Fig. 6-4-15

(k) Horizontal dark shading adjustment

Test point	: TP301 (PRE VIDEO)	Process Board
Adjust	: VR221 (TARGET)	Deflection Board
	VR213 (H. PARA)	" "
	VR212 (H. SAW)	" "

- Keep the iris setting jig connected as in the preceding step.
- Set the AGC switch to the OFF position and the lens iris to CLOSE. Wait approx. five minutes before proceeding until the dark current has stabilized.
- Connect the oscilloscope to TP301.
- Trigger the oscilloscope at H. rate. (Use TP201 on deflection board, or TP314 on process board.)
- While watching the waveform, adjust DARK SHADING, H. SAW VR212 and H. PARA VR213 until the dark current waveform is as flat as possible. (Fig. 6-4-16)

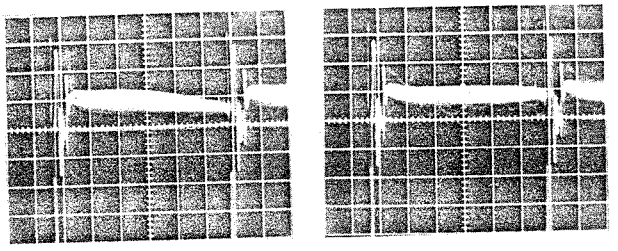

NO GOOD GOOD

Fig. 6-4-16

- After the above adjustment, trigger the oscilloscope at V. rate. (Use TP202 on deflection board, or TP316 on process board).
- Adjust TARGET VR221 until the dark current in middle of the waveform is 50mV. (see step (b) on page 10 for dark current adjustment.)

(l) Beam current readjustment

- Adjust the beam current using the procedure described in step 6-4-(d) page 10.

(m) Dynamic focus adjustment

Adjusts	: VR216 (H. PARA)	Deflection Board	
	VR217 (H. SAW)	"	"
	VR215 (V. SAW)	"	"
	VR214 (V. PARA)	"	"
	VR203 (FOCUS)	"	"
Observe	: Color monitor		

- Keep the iris setting jig connected as in the preceding step.
- Set the AGC switch to the OFF position and the lens iris to F4.
- Aim the camera at the white chart.
- Observe the color monitor, and adjust FOCUS VR203 for minimum green in the center and maximum magenta (red) throughout the picture area.
- Observe the color monitor and adjust for the best white balance at the center of the screen, using R and B gain controls on the side of the camera.
- Increase color monitor's chroma gain for better viewing. Make sure the monitor is converged properly.
- Adjust DYNAMIC FOCUS, V. PARA VR214, V. SAW VR215, H. PARA VR216 and H. SAW VR217 to minimize green in the corners and edge of the picture. (Fig. 6-4-17)

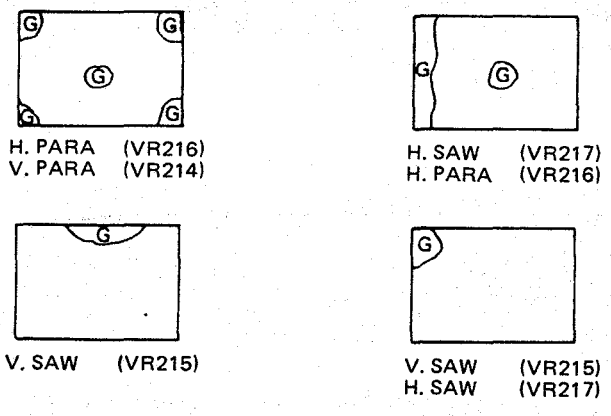

Fig. 6-4-17

- Overall focus is affected by the dynamic focus adjustment so readjust FOCUS VR203 occasionally while performing dynamic focus adjustment.
- The object of this adjustment is to optimize overall focus, especially at the picture edges and corners.

(n) Vertical dark shading and optical black (OB) offset adjustment

Test point	: TP304 (Y_H-2)	Process Board	
Adjusts	: VR302 (OB OFFSET)	"	"
	VR307 (V. SAWTOOTH)	"	"
	VR308 (V. PARABOLA)	"	"
	VR201 (AIC SET)	Deflection Board	

- Keep the iris setting jig connected as in the preceding step.
- Set the AGC switch to the ON position and the lens iris to CLOSE. Wait approx. five minutes until the dark current is stabilized.
- Connect a 100μF/16V capacitor between TP310 (MATRIX) and TP315(GROUND) to remove the color reproduction correction signal.
- Connect the oscilloscope to TP304.
- Trigger the oscilloscope at H. rate. (Use TP201 on deflection board, or TP314 on process board.)
- Turn AIC SET VR201 fully clockwise.
- Adjust OB OFFSET VR302 so that the signal amplitude from the preblanking level to the center of dark signal becomes 50mV. (Fig. 6-4-18(1))

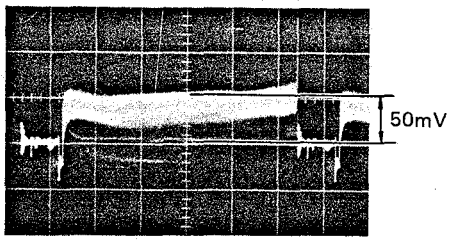

Fig. 6-4-18(1)

- Adjust V. SAWTOOTH VR307 and V. PARABOLA VR-308 so that the top portion of dark signal waveform becomes as narrow as possible. (Fig. 6-4-18(2))

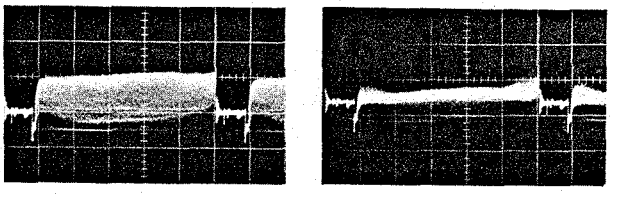

NO GOOD GOOD

Fig. 6-4-18(2)

- Adjust OB OFFSET VR302 so that the center portion of dark current level matches the preblanking level. (Fig.6-4-18(3))

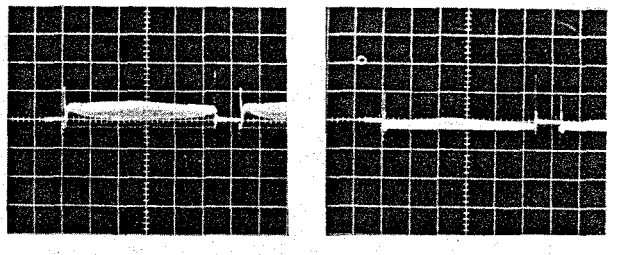

NO GOOD GOOD

Fig. 6-4-18 (3)

(o) Input level adjustment

Test point	: TP302 (Y)	Process Board	
Adjust	: VR301 (INPUT GAIN)	"	"

- Keep the capacitor connected as in the preceding step.
- Keep the iris setting jig connected as in the preceding step.
- Set the AGC switch to the OFF position and the lens iris to F2.8
- Aim the camera at the logarithmic gray scale chart.
- Connect the oscilloscope to TP302.
- Trigger the oscilloscope at H. rate. (Use TP201 on deflection board, or TP314 on process board.)
- Adjust INPUT GAIN VR301 so that voltage between the OB level and the fourth step of the gray scale is 0.2V. (Fig. 6-4-19)

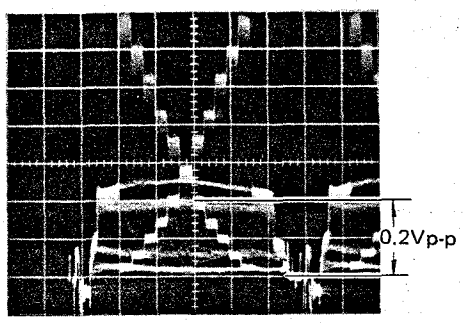

Fig. 6-4-19

(p) Y_H gamma adjustment

Tets point	: TP303 (Y_H-1)	Process Board
Adjust	: VR303 (Y_H GAMMA)	" "

- Keep the capacitor connected as in the preceding step.
- Keep the iris setting jig connected as in the preceding step.
- Set the AGC switch to the OFF position and the lens iris to F2.8.
- Aim the camera at the logarithmic gray scale chart.
- Connect the oscilloscope to TP303.
- Trigger the oscilloscope at H. rate. (Use TP201 on deflection board, or TP314 on process board.)
- Adjust Y_H GAMMA VR303 until the signal level from the white to black chip of the gray scale chart is 0.38Vp-p. (Fig. 6-4-20)

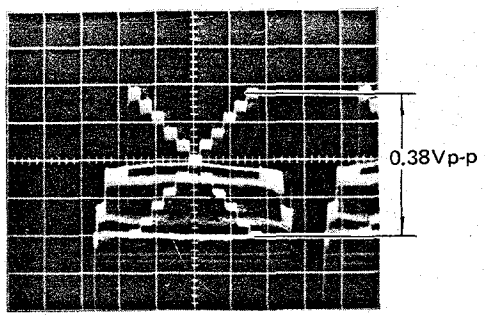

Fig. 6-4-20

Steps denoted by shaded outlines do not have to be performed if only vidicon is replaced.

(q) V. Edge balance adjustment

Test point	: TP313 (V. EDGE)	Process Board
Adjust	: VR323 (V. EDGE BALANCE)	" "

- Keep the capacitor connected as in the preceding step.
- Keep the iris setting jig connected as in the preceding step.
- Set the AGC switch to the OFF position and the lens iris to F2.8.
- Aim the camera at the logarithmic gray scale chart.
- Connect the oscilloscope to TP313.
- Trigger the oscilloscope at H. rate. (Use TP201 on deflection board, or TP314 on process board.)
- Adjust V.EDGE BALANCE VR323 to cancel the video signal. (Fig. 6-4-21)

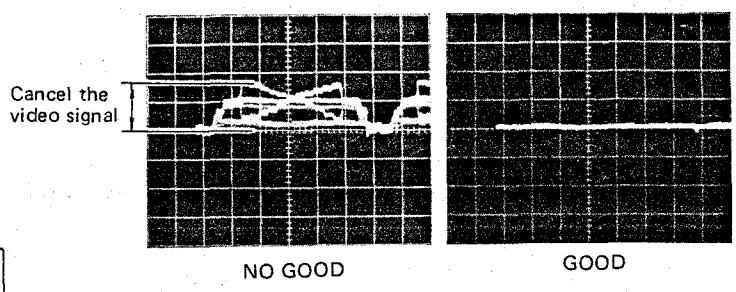

Fig. 6-4-21

(r) AIC level adjustment

Test point	: TP306 (PAL)	Process Board
Adjust	: VR201 (AIC SET)	Deflection Board

- Keep the capacitor
- Keep the iris setting jig connected as in the preceding step.
- Set the AGC switch to the ON position and the lens iris to AUTO.
- Aim the camera at the logarithmic gray scale chart so that the chart occupies the monitor screen.
- Connect the oscilloscope to TP306.
- Trigger the oscilloscope at H. rate. (Use TP201 on deflection board, or TP314 on process board.)
- Adjust AIC SET VR201 for 0.71V from the blanking level to the top step of the gray scale. (Fig. 6-4-22)

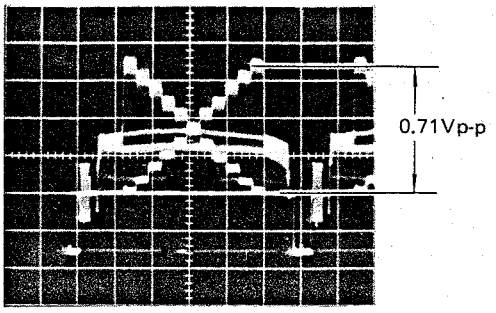

Fig. 6-4-22

(s) R and B signal separation adjustment

Test points :	TP307 (B)	Process Board
	TP308 (R)	" "
Adjusts :	VR309 (Rc/Bc SEPARATION)	" "
	VC301 (Rc/Bc SEPARATION)	" "

- Keep the capacitor connected as in the preceding step.
- Keep the iris setting jig connected as in the preceding step.
- Set the AGC switch to the ON position and the lens iris to F2.8.
- Aim the camera at the logarithmic gray scale chart.
- Connect the oscilloscope to TP307(B) and TP308(R).
- Trigger the oscilloscope at H. rate. (Use TP201 on deflection board, or TP314 on process board.)
- Adjust Rc/Bc SEPARATION VC301 for minimum waveform flicker (especially at TP307, B.output). (Fig. 6-4-23)
- Adjust Rc/Bc SEPARATION VR309 for the same condition.
- Adjust Rc/Bc SEPARATION VC301 and VR309 alternately until the flicker in both waveform is minimum.

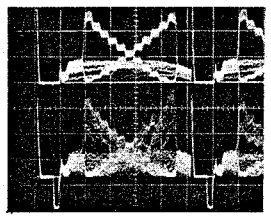

NO GOOD

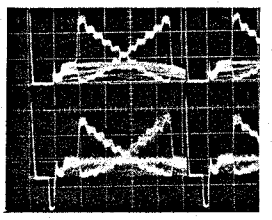

GOOD

Fig. 6-4-23

(t) B gain and Y_L pedestal preset adjustment

Test points :	TP307 (B)	Process Board
	TP309 (Y_L)	" "
Adjusts :	VR306 (Y_L PEDESTAL)	" "
	VR317 (BLUE GAIN PRESET)	" "

- Keep the capacitor connected as in the preceding step.
- Keep the iris setting jig connected as in the preceding step.
- Set the AGC switch to the ON position and the lens iris to F2.8.
- Aim the camera at the logarithmic gray scale chart.
- Connect the oscilloscope to TP307(B) and TP309(Y_L).
- Trigger the oscilloscope at H. rate. (Use TP201 on deflection board, or TP314 on process board.)
- **Set the R and B gain Controls on the side of the camera to their center detent position.**
- Turn RED TRACKING-1 VR312, RED TRACKING-2 VR311, BLUE TRACKING-1 VR313 and BLUE TRACKING-2 VR314 to their mechanical center.
- Turn TRACKING-3 SET VR304 fully clockwise, and RED TRACKING-3 VR310 and BLUE TRACKING-3 VR315 fully counterclockwise.
- Overlay the B. signal and Y_L signal on the oscilloscope, and adjust BLUE GAIN PRESET VR317 so that the signals match in the lower half of the gray scale. (Fig. 6-4-24)

  Before adjusting VR317, if the gray scale's black chip of Y_L signal is suppressed, turn Y_L PEDESTAL VR306 until the black chip of Y_L signal can be observed.

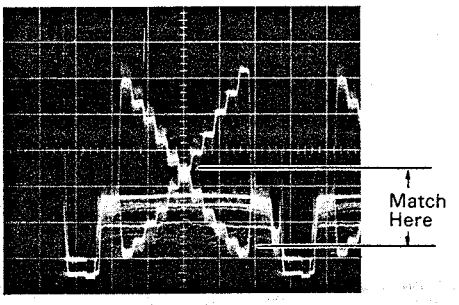

Fig. 6-4-24

- Next, adjust Y_L PEDESTAL VR306 so that the gray scale's 0~2nd step of Y_L signal matches that of B. signal. (Fig. 6-4-25)

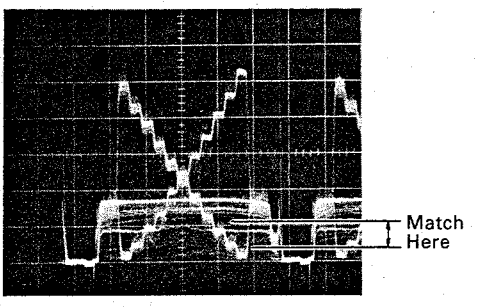

Fig. 6-4-25

- Repeat adjusting VR317 and VR306 until the lower half of gray scale waveforms match.

(u) R. gain and R. pedestal preset adjustment

Test points	: TP308 (R)	Process Board
	TP309 (Y_L)	" "
Adjusts	: VR305 (RED PEDESTAL)	" "
	VR318 (RED GAIN PRESET)	" "

- Keep the capacitor connected as in the preceding step.
- Keep the iris setting jig connected as in the preceding step.
- Set the AGC switch to the ON position and the lens iris to F2.8.
- Aim the camera at the logarithmic gray scale chart.
- Connect the oscilloscope to TP308(R) and TP309(Y_L).
- Trigger the oscilloscope at H. rate. (Use TP201 on deflection board, or TP314 on process board.)
- Overlay the R signal and Y_L signal on the oscilloscope, and adjust RED GAIN PRESET VR318 so that the signals match in the lower half of the gray scale. (Fig. 6-4-26)

  Before adjusting VR318, if the gray scale's black chip of R signal is suppressed, turn RED PEDESTAL VR305 until the black chip of R signal can be observed.

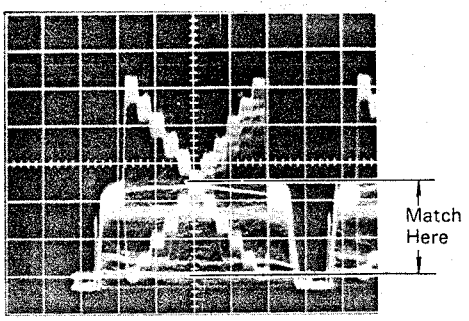

Fig. 6-4-26

- Next, adjust RED PEDESTAL VR305 so that the gray scale's 0~2nd step of R signal matches that of Y_L signal. (Fig. 6-4-27)

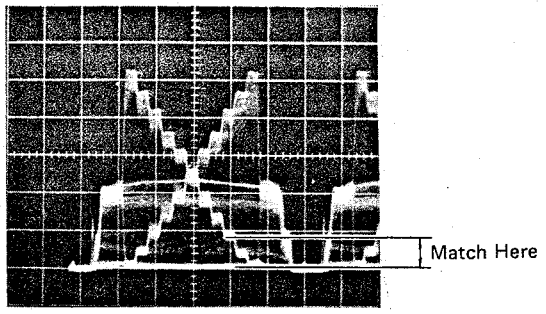

Fig. 6-4-27

- Repeat adjusting VR318 and VR305 until the lower half of gray scale waveform match.

(v) Signal shading adjustment

Test points	: TP307 (B)	Process Board
	TP308 (R)	" "
	TP309 (Y_L)	" "
	TP310 (MATRIX)	" "
Adjusts	: VR205 (B-H. SAW)	Deflection Board
	VR204 (B-H. PARA)	" "
	VR206 (B-V. SAW)	" "
	VR207 (B-V. PARA)	" "
	VR209 (R-H. SAW)	" "
	VR208 (R-H. PARA)	" "
	VR210 (R-V. SAW)	" "
	VR211 (R-V. PARA)	" "

- Keep the capacitor connected as in the preceding step.
- Keep the iris setting jig connected as in the preceding step.
- Set the AGC switch to the ON position and the lens iris to F4.
- Aim the camera at the white chart.

■ R SIGNAL SHADING ADJUSTMENT

- Connect the oscilloscope to TP309(Y_L) (ch1) and TP308(R) (ch2).
- Invert ch2(TP308) on the oscilloscope.
- Set the oscilloscope to ADD mode and observe the Y_L-R signal thus produced.

(1) R signal horizontal shading adjustment

- Trigger the oscilloscope at H. rate. (Use TP201 on deflection board, or TP314 on process board.)
- Adjust R-H.SAW VR209 and R-H.PARA VR208 to make the waveform as flat as possible. (Fig. 6-4-28)

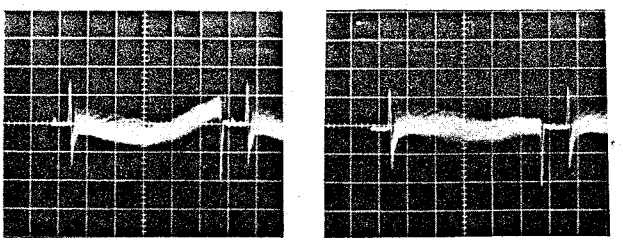

NO GOOD GOOD

Fig. 6-4-28

(2) R signal vertical shading adjustment

- Trigger the oscilloscope at V. rate. (Use TP202 on deflection board, or TP316 on process board.)
- Adjust R-V.SAW VR210 and R-V.PARA VR211 to make the waveform as flat as possible.(Fig.6-4-29)

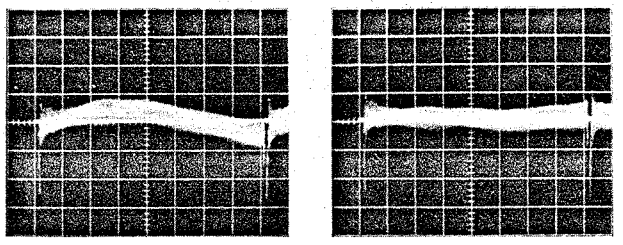

NO GOOD GOOD

Fig. 6-4-29

- Reset the Invert/Normal ch2 switch on the oscilloscope to Normal, and set to the Alternate mode.

■ B SIGNAL SHADING ADJUSTMENT

- Connect the oscilloscope to TP309(Y_L) (ch1) and TP307(B) (ch2).
- Invert ch2 (TP307) on the oscilloscope.
- Set the oscilloscope to the ADD mode and observe the Y_L-B signal thus produced.

(1) B signal horizontal shading adjustment

- Trigger the oscilloscope at H. rate. (Use TP201 on deflection board, or TP314 on process board.)
- Adjust B-H.SAW VR205 and B-H.PARA VR204 to make the waveform as flat as possible.(Fig.6-4-30)

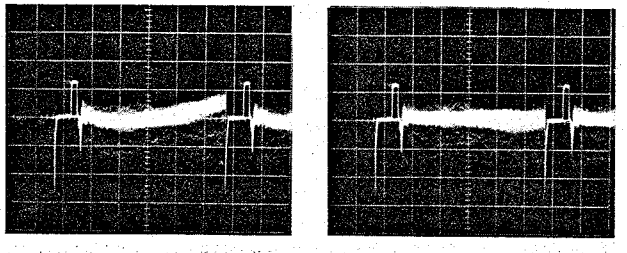

NO GOOD GOOD

Fig. 6-4-30

(2) B signal vertical shading adjustment

- Trigger the oscilloscope at V. rate. (Use TP202 on deflection board, or TP316 on process board.)
- Adjust B-V.SAW VR206 and B-V.PARA VR207 to make the waveform as flat as possible.(Fig.6-4-31)

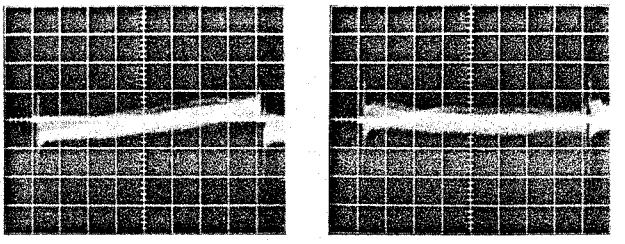

NO GOOD GOOD

Fig. 6-4-31

- Reset the Invert/Normal ch2 switch on the oscilloscope to Normal, and set to the Alternate mode.
- Keep the capacitor on for the next adjustment.

(w) Y_L and B signal tracking adjustment

Test points	: TP307 (B)	Process Board	
	TP309 (Y_L)	"	"
Adjusts	: VR317 (BLUE GAIN PRESET)	"	"
	VR313 (BLUE TRACKING-1)	"	"
	VR314 (BLUE TRACKING-2)	"	"
	VR306 (Y_L PEDESTAL)	"	"

- Confirm that TRACKING-3 SET VR304 is turned fully clockwise, RED TRACKING-3 VR310 and BLUE TRACKING-3 VR315 are turned fully counter-clockwise, and BLUE TRACKING-1 VR313 and BLUE TRACKING-2 VR314 are turned to their mechanical center.
- Keep the capacitor connected as in the preceding step.
- Keep the iris setting jig connected as in the preceding step.
- Set the AGC switch to the ON position and the lens iris to F2.8.

- Aim the camera at the logarithmic gray scale chart.
- Connect the oscilloscope to TP307 (B) and TP309 (Y_L).
- Trigger the oscilloscope at H. rate. (Use TP201 on deflection board, or TP314 on process board.)
- Overlay the Y_L signal and the B signal on the oscilloscope, and adjust BLUE GAIN PRESET VR317 so that signals match in the lower half of the gray scale. (Fig.6-4-32)

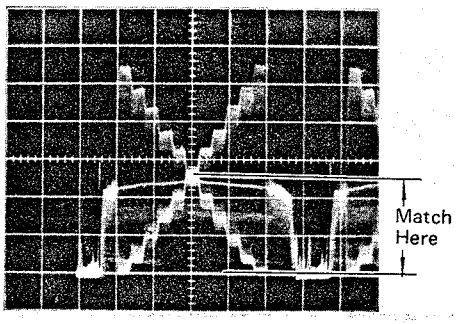

Fig. 6-4-32

- Set the lens iris to F5.6.
- Adjust BLUE TRACKING-1 VR313 so that the B signal matches the Y_L signal in the 4th~5th step of gray scale waveform. (Fig. 6-4-33)

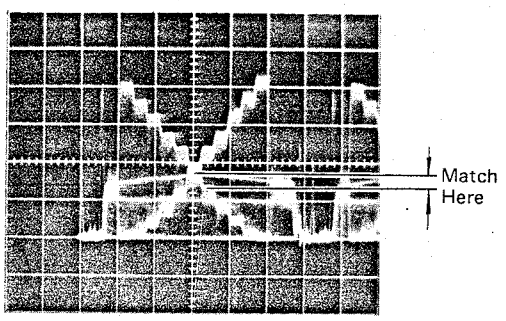

Fig. 6-4-33

- Adjust Y_L PEDESTAL VR306 so that the Y_L signal matches the B signal in the 0~2nd step of gray scale waveform. (Fig. 6-4-34)

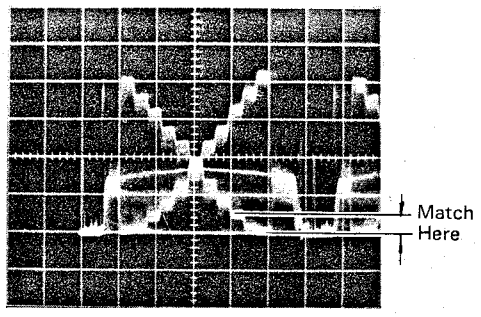

Fig. 6-4-34

- Set the lens iris to F2.8
- Adjust BLUE TRACKING-2 VR314 so that the B signal matches the Y_L signal in the 8th~9th step of gray scale waveform. (Fig. 6-4-35)

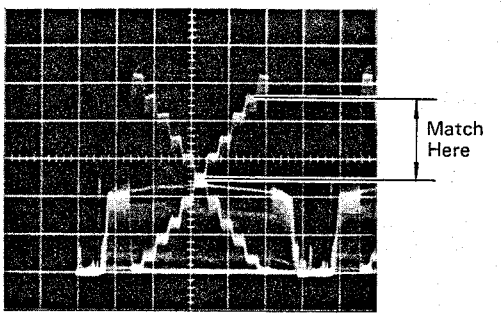

Fig. 6-4-35

- Repeat the above steps until the Y_L and B signals match.

(x) B signal tracking-3 adjustment

Test points :	TP307 (B)	Process Board	
	TP309 (Y_L)	"	"
Adjusts	: VR304 (TRACKING-3 SET)	"	"
	VR315 (BLUE TRACKING-3)	"	"
	VR310 (RED TRACKING-3)	"	"

- Confirm that TRACKING-3 SET VR304 is turned fully clockwise, and RED TRACKING-3 VR310 and BLUE TRACKING-3 VR315 are turned fully counterclockwise.
- Keep the capacitor connected as in the preceding step.
- Keep the iris setting jig connected as in the preceding step.
- Set the AGC switch to the ON position and the lens iris to F2.
- Aim the camera at the logarithmic gray scale chart.
- Connect the oscilloscope to TP307(B) and TP309(Y_L).
- Trigger the oscilloscope at H. rate. (Use TP201 on deflection board, or TP314 on process board.)
- Compare the B signal and Y_L signal on the oscilloscope, and note the step at which the B signal no longer tracks with the Y_L signal. (Fig. 6-4-36)
  In the example shown in Fig. 6-4-36, 5th step is the point of divergence.

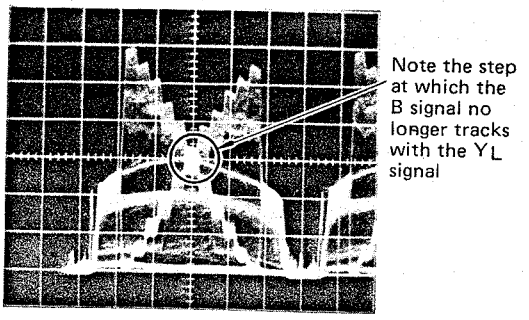

Fig. 6-4-36

- Turn back TRACKING-3 SET VR304 slowly and stop it at the point where the noted step of B signal just starts to be extended. (Fig.6-4-37)

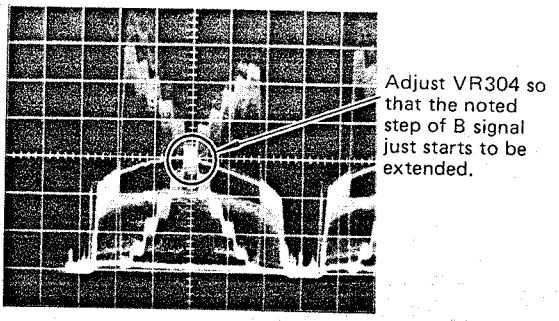

Fig. 6-4-37

- Adjust BLUE TRACKING-3 VR315 so that the B signal matches the Y_L signal in the 8th~9th step of gray scale waveform. (Fig.6-4-38)

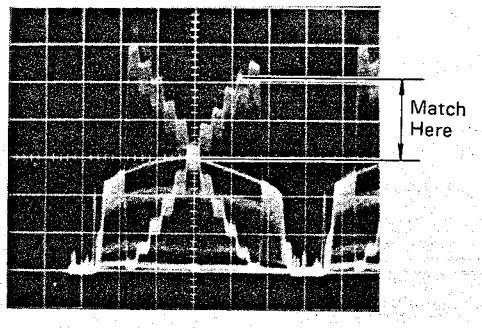

Fig. 6-4-38

- Repeat the above steps until the B signal and Y_L signal match.

(y) Y_L and R signal tracking adjustment

Test points	: TP308 (R)	Process Board	
	TP309 (Y_L)	"	"
Adjusts	: VR318 (RED GAIN PRESET)	"	"
	VR312 (RED TRACKING-1)	"	"
	VR311 (RED TRACKING-2)	"	"
	VR305 (RED PEDESTAL)	"	"

- Keep the capacitor connected as in the preceding step.
- Keep the iris setting jig connected as in the preceding step.
- Set the AGC switch to the ON position and the lens iris to F2.8.
- Aim the camera at the logarithmic gray scale chart.
- Connect the oscilloscope to TP308(R) and TP309(Y_L).
- Trigger the oscilloscope at H. rate. (Use TP201 on deflection board, or TP314 on process board.)
- Overlay the Y_L signal and the R signal on the oscilloscope, and adjust RED GAIN PRESET VR318 so that signals match in the lower half of the gray scale. (Fig.6-4-39)

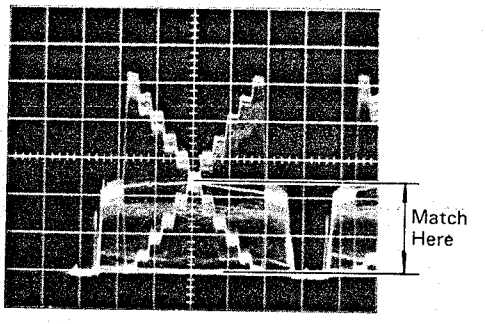

Fig. 6-4-39

- Set the lens iris to F5.6.
- Adjust RED TRACKING-1 VR312 so that the R signal matches the Y_L signal in the 4th~5th step of gray scale waveform.

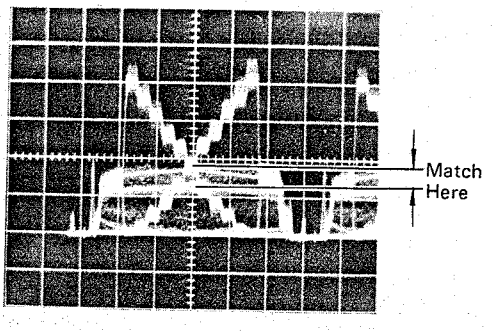

Fig. 6-4-40

- Adjust RED PEDESTAL VR305 so that the R signal matches the Y_L signal in the 0~2nd step of gray scale waveform. (Fig. 6-4-41)

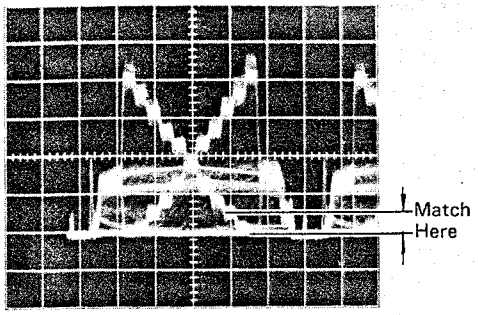

Fig. 6-4-41

- Set the lens iris to F2.8.
- Adjust RED TRACKING-2 VR311 so that the R signal matches the Y_L signal in the 8th~9th step of gray scale waveform. (Fig.6-4-42)

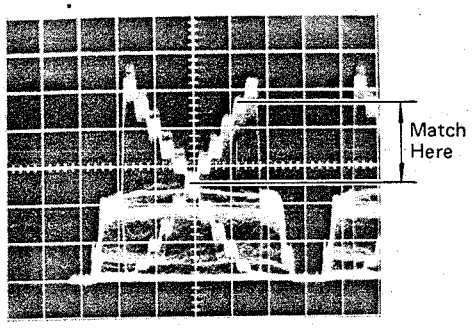

Fig. 6-4-42

- Repeat the above steps until the Y_L and R signals match.

(z) R signal tracking-3 adjustment

Test points	: TP308 (R)	Process Board
	TP309 (Y_L)	" "
Adjust	: VR310 (RED TRACKING-3)	" "

- Keep the capacitor connected as in the preceding step.
- Keep the iris setting jig connected as in the preceding step.
- Set the AGC switch to the ON position and the lens iris to F2.
- Aim the camera at the logarithmic gray scale chart.
- Connect the oscilloscope to TP308(R) and TP309(Y_L).
- Trigger the oscilloscope at H. rate. (Use TP201 on deflection board, or TP314 on process board.)

- Adjust RED TRACKING-3 VR310 so that the R signal matches the Y_L signal in the 8th~9th step of gray scale waveform. (Fig.6-4-43)

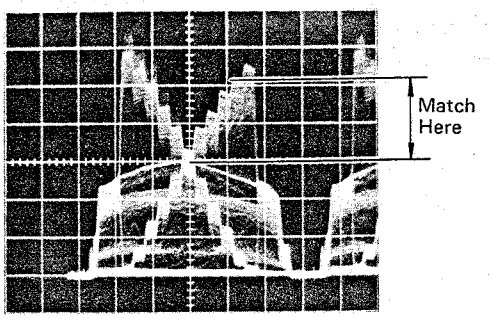

Fig. 6-4-43

- After completing the above adjustment, disconnect the capacitor connected between TP310 and TP315.

(aa) Carrier balance adjustment

Test point	: TP311 (BURST)	Process Board
Adjusts	: VR319 (B-Y_L CARRIER BALANCE)	" "
	VR320 (R-Y_L CARRIER BALANCE)	" "

- Disconnect the one capacitor connected between TP310 and TP315, if not already removed.
- Keep the iris setting jig connected as in the preceding step.
- Set the AGC switch to the ON position and the lens iris to CLOSE.
- Connect the oscilloscope to TP311.
- Trigger the oscilloscope at H. rate. (Use TP201 on deflection board, or TP314 on process board.)
- Adjust B-Y_L CARRIER BALANCE VR319 and R-Y_L CARRIER BALANCE VR320 alternately until the 4.43MHz carrier component during blanking period is reduced to a minimum. (Fig. 6-4-44)

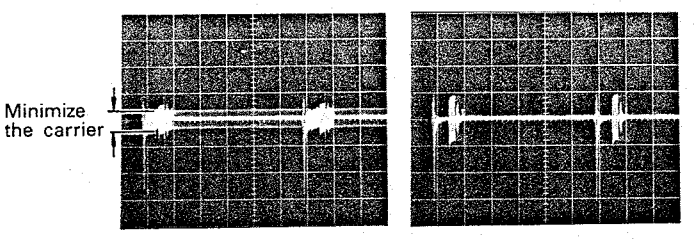

NO GOOD GOOD

Fig. 6-4-44

(bb) Burst phase and chroma gain adjustment

Observe	: Vectorscope	
Adjusts	: VR321 (CHROMA GAIN)	Process Board
	VR322(COLOR REPRODUCTION)	" "

- Keep the iris setting jig connected as in the preceding step.
- Set the AGC switch to the OFF position and the lens iris to F2.8.
- Aim the camera at the color chart (YWV2100RB98).
- Connect the PAL output into a terminated vectorscope.
- Adjust CHROMA GAIN VR321 so that the RED vector on the vectorscope is equal to 160% as compares to the burst signal. (See Fig.6-4-45)
- Adjust COLOR REPRODUCTION VR322 so that the RED vector is 19° away from the R-Y axis. (Fig.6-4-45)

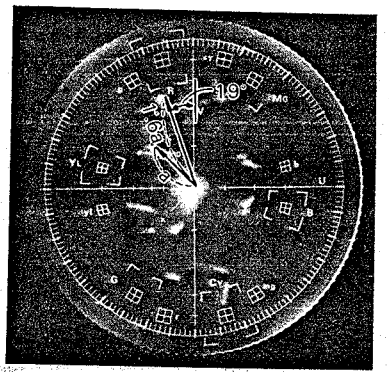

Fig. 6-4-45

(cc) White balance indicator adjustment

Test point	: Terminal No. 2 of Multi-pin connector CN204	Deflection Board
Adjust	: VR316(WHITE BALANCE)	Process Board

- Keep the iris setting jig connected as in the preceding step.
- Set the AGC switch to the OFF position and the lens iris to CLOSE.

Steps denoted by shaded outlines do not have to be performed if only vidicon is replaced.

- Set the white balance switch on the side of camera to the CHECK position.
- Connect the DVM probe to terminal No.2 of multi-pin connector CN204 on the deflection circuit board.
- Adjust WHITE BALANCE VR316 so that the voltage at terminal No. 2 of CN204 becomes 1.8V.
- AFTER COMPLETING THE ADJUSTMENT, DISCONNECT THE IRIS SETTING JIG FROM THE CAMERA, AND CONNECT THE PIN CONNECTOR J207 ON THE DEFLECTION CIRCUIT BOARD.

6-5. Electronic Viewfinder Adjustment

- The camera must be completely aligned before viewfinder adjustment is made.
- The conditions and connections for viewfinder adjustment are the same as shown in Fig. 6-1-1 on page 8.
- Refer to page 23 for the adjusting controls.

a) Horizontal hold adjustment

Adjust	: VR802 (H. HOLD)
Observe	: Viewfinder

- Aim the camera at the ball chart (YWV2100RB03).
- Adjust H.HOLD VR802 to a mid-point of horizontal hold lock range.

b) Reduce picture size using H.SIZE L805 and V.SIZE VR805.

c) Picture tilt adjustment

Adjust	: Deflection coil
Observe	: Viewfinder

- Make sure the camera is level with chart.
- Loosen the deflection coil holding screw. (Fig.6-5-1)

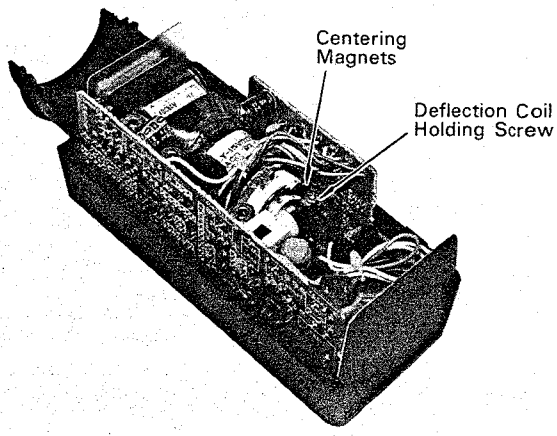

Fig. 6-5-1

- Observe the viewfinder, and turn the deflection coil until the image is straight.
- Clamp the deflection coil with the holding screw.

d) Centering magnets adjustment

Adjust : Centering magnets
Observe : Viewfinder

- Aim the camera at the ball chart.
- Adjust the centering magnets (see Fig.6-5-1) until the center of the picture(+) comes to the center of the viewfinder raster. (Fig.6-5-2)

Viewfinder

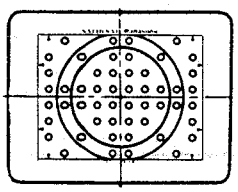

Fig. 6-5-2

e) Horizontal and vertical size adjustment

Adjusts : L805(H. SIZE)
VR805 (V. SIZE)
Observe : Viewfinder

- Aim the camera at the ball chart, and line up the reference arrow head with edge of the raster (blanking) on an underscanned monitor.(Fig.6-5-3)
- Adjust H.SIZE L805 to a point where the ball chart's left bright edges just disappear on the viewfinder.(Fig.6-5-3)

Steps denoted by shaded outlines do not have to be performed if only vidicon is replaced.

- Confirm that the picture increases by same amount on both sides.
- Then adjust V.SIZE VR805 so that the circle in the chart is nearly a true circle.
- Confirm that the picture increases by same amount on top and bottom.

Underscaned Monitor

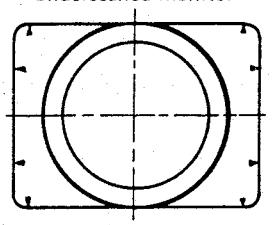

Viewfinder

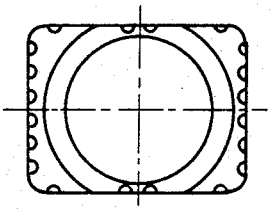

Fig. 6-5-3

f) Focus adjustment

Adjust : VR804 (FOCUS)
Observe : Viewfinder

- Aim the camera at the resolution chart.
- Adjust FOCUS VR804 for best resolution in the viewfinder.

g) Contrast and brightness adjustment

Adjusts : VR803 (BRIGHTNESS)
VR801 (CONTRAST)
Observe : Viewfinder

- Aim the camera at the logarithmic gray scale chart.
- Adjust BRIGHTNESS VR803 and CONTRAST VR801 so that B/W chip gradations will be the same on the viewfinder screen as that in the monitor.

LOCATION OF TEST POINT AND ADJUSTING CONTROLS

Viewfinder Circuit Board

— View From Component Side —

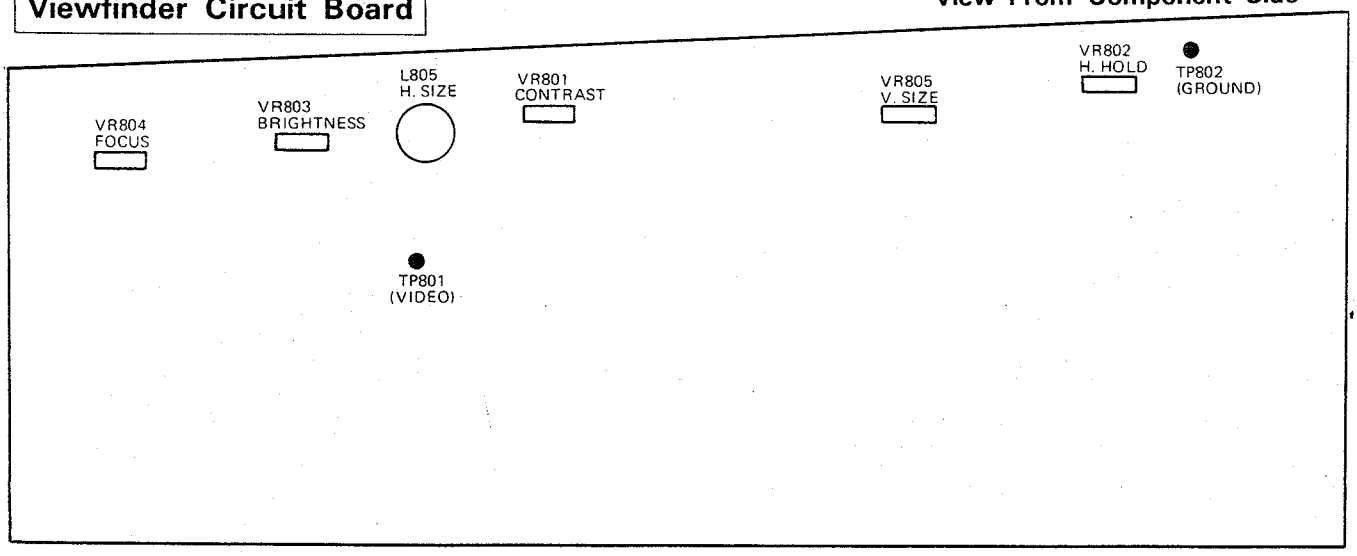

- Disconnect the CN203 socket from the deflection circuit board, to which the three wire leads from the auto iris mechanism assembly are connected. Note the pin number and color of each wire.
- Remove the three pins from the CN203 connector body corresponding to the three wire leads by using the thin wire lead such as resistor lead to depress the holding tab on the pins. (Fig.8-5-4)

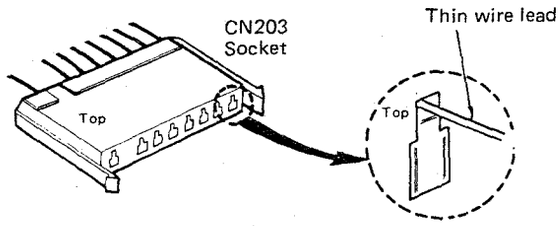

Fig. 8-5-4

- Remove the three screws on the auto iris mechanism assembly (Fig.8-5-5), and remove the assembly by pulling it forward.

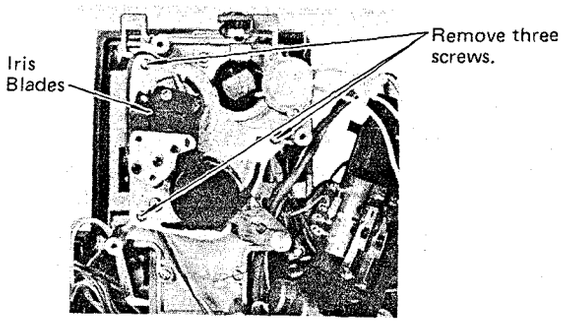

Fig. 8-5-5

- Install the new auto iris mechanism assembly in the reverse order. Be careful not to hold the iris blades. (Fig. 8-5-5)
- Fix the assembly with the three screws.
- Insert the color temperature conversion filter between the iris blades and the master lens. (Fig.8-5-7) Be careful not to touch the iris blades.

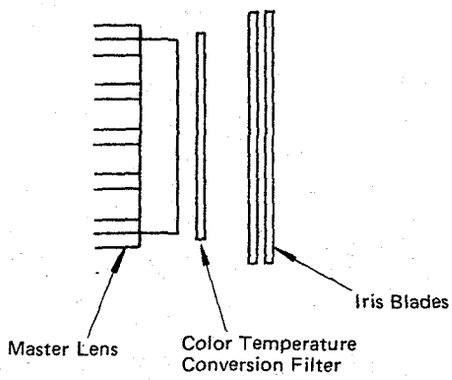

Fig. 8-5-7

- Install the color temperature conversion filter and the spring by fixing the fulcrum portion of the filter with one screw. (Fig.8-5-8)

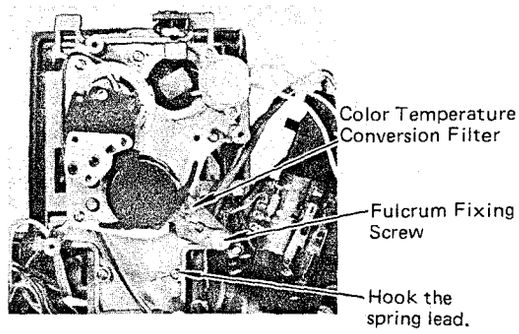

Fig. 8-5-8

- Hook the spring lead to its holding pole and attach the spring lead to the pole. (Fig.8-5-8)
- Insert the three pins connected to the three wire leads from the auto iris mechanism assembly to the CN203 socket following the notes previously made. (Fig.8-5-9)

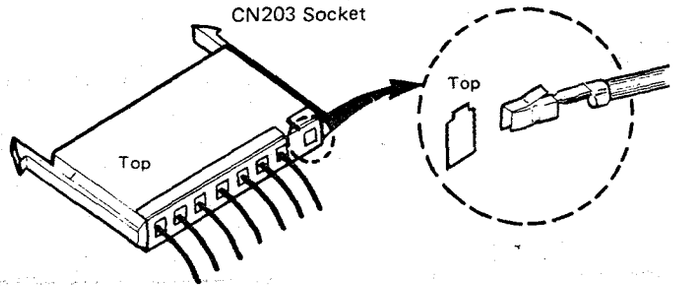

Fig. 8-5-9

- After inserting the three pins to the CN203 socket, connect the CN203 socket to the deflection circuit board.
- Install the lens base by fixing the four screws. (Fig.8-5-2)
- Install the viewfinder connector and its angle bracket with the one screw. (Fig.8-5-2)
- After setting the white balance switch and the indoor-outdoor selection switch to the lower position respectively, install the switch board assembly with the three screws. (Fig.8-5-1)

ORDER NO. AVD-8005-524

Service Manual

Vol. 3

Block Diagrams
Schematic Diagrams
Conductor Views

Colour Video Cameras

WV-3200N/WV-3200E

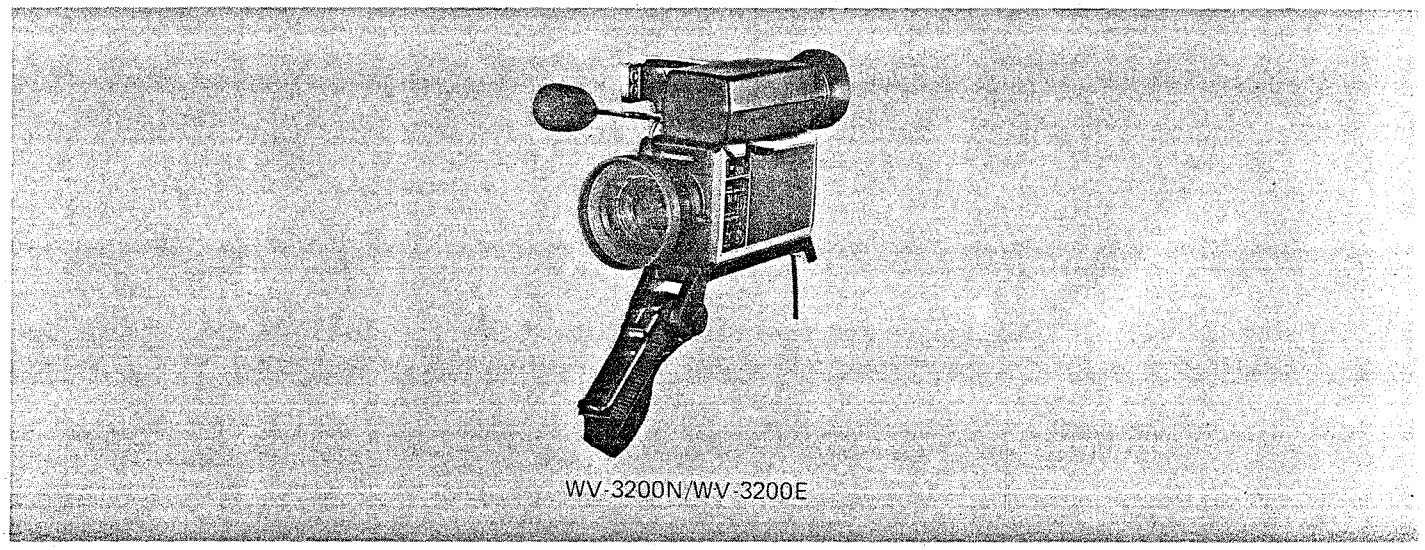

CONTENTS

BLOCK DIAGRAM

Outline 1
Electronic Viewfinder (YWV3206EZK08, ZK09, ZK10) 2
Deflection Circuit Board (YWV3201EZK02) 3
Process Circuit Board (YWV3201EZK03) 4

WIRING DIAGRAM 5

SCHEMATIC DIAGRAM

Electronic Viewfinder (YWV3206EZK08, ZK09, ZK10) 7
Deflection Circuit Board (YWV3201EZK02) 9
Process Circuit Board (YWV3201EZK03) 10
Preamplifier Circuit Board (YWV3201EZK01) 12
Power Supply (YWV3203EZK11, ZK12) 12

CONDUCTOR VIEW

Electronic Viewfinder (YWV3206EZK08, ZK09, ZK10) 6
Deflection Circuit Board (YWV3201EZK02) 8
Process Circuit Board (YWV3201EZK03) 11
Preamplifier Circuit Board (YWV3201EZK01) 12
Power Supply (YWV3203EZK11, ZK12) 12

National/Panasonic

Matsushita Electric Trading Co., Ltd.
P.O. Box 288, Central Osaka Japan

BLOCK DIAGRAM OF OUTLINE

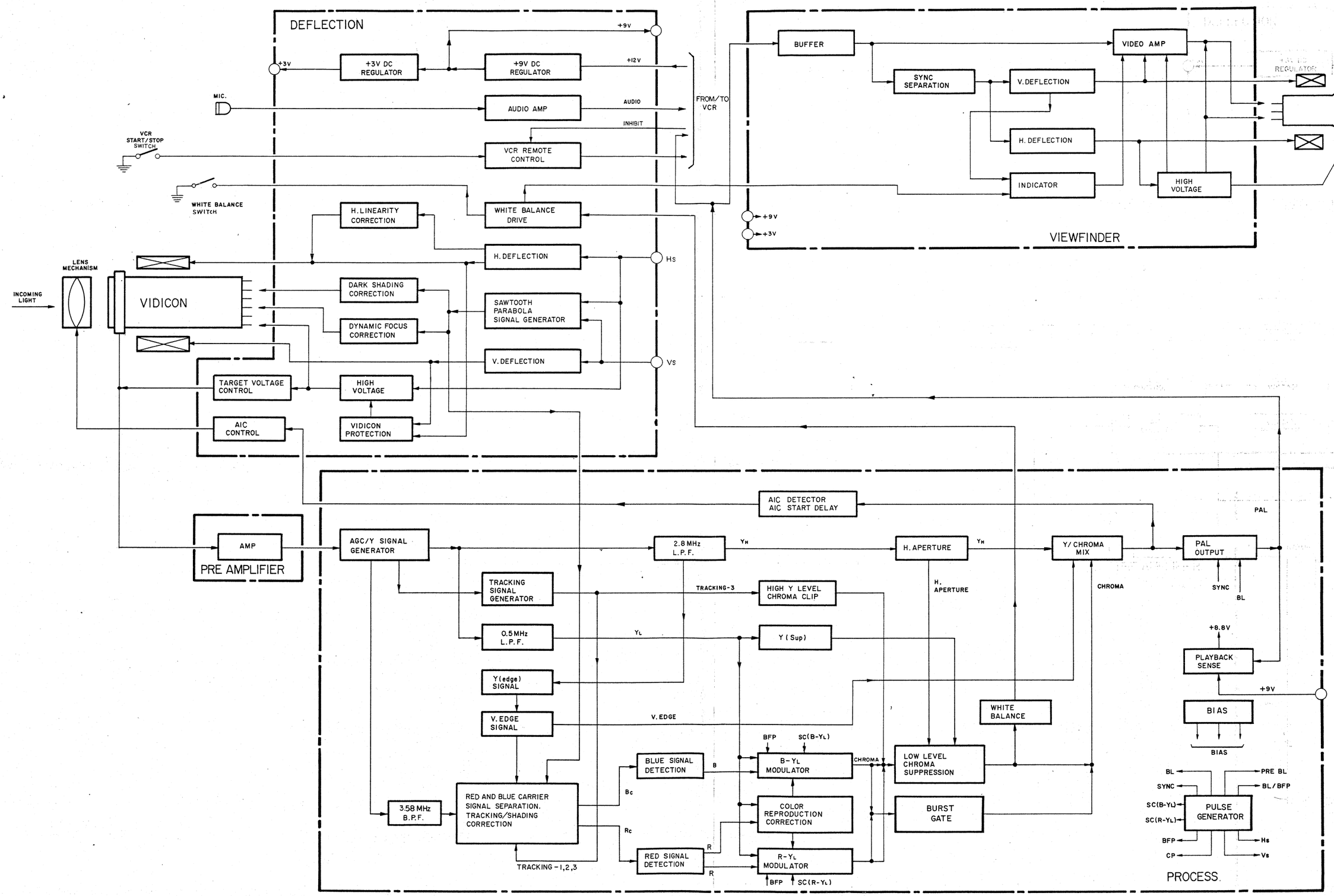

BLOCK DIAGRAM OF ELECTRONIC VIEWFINDER

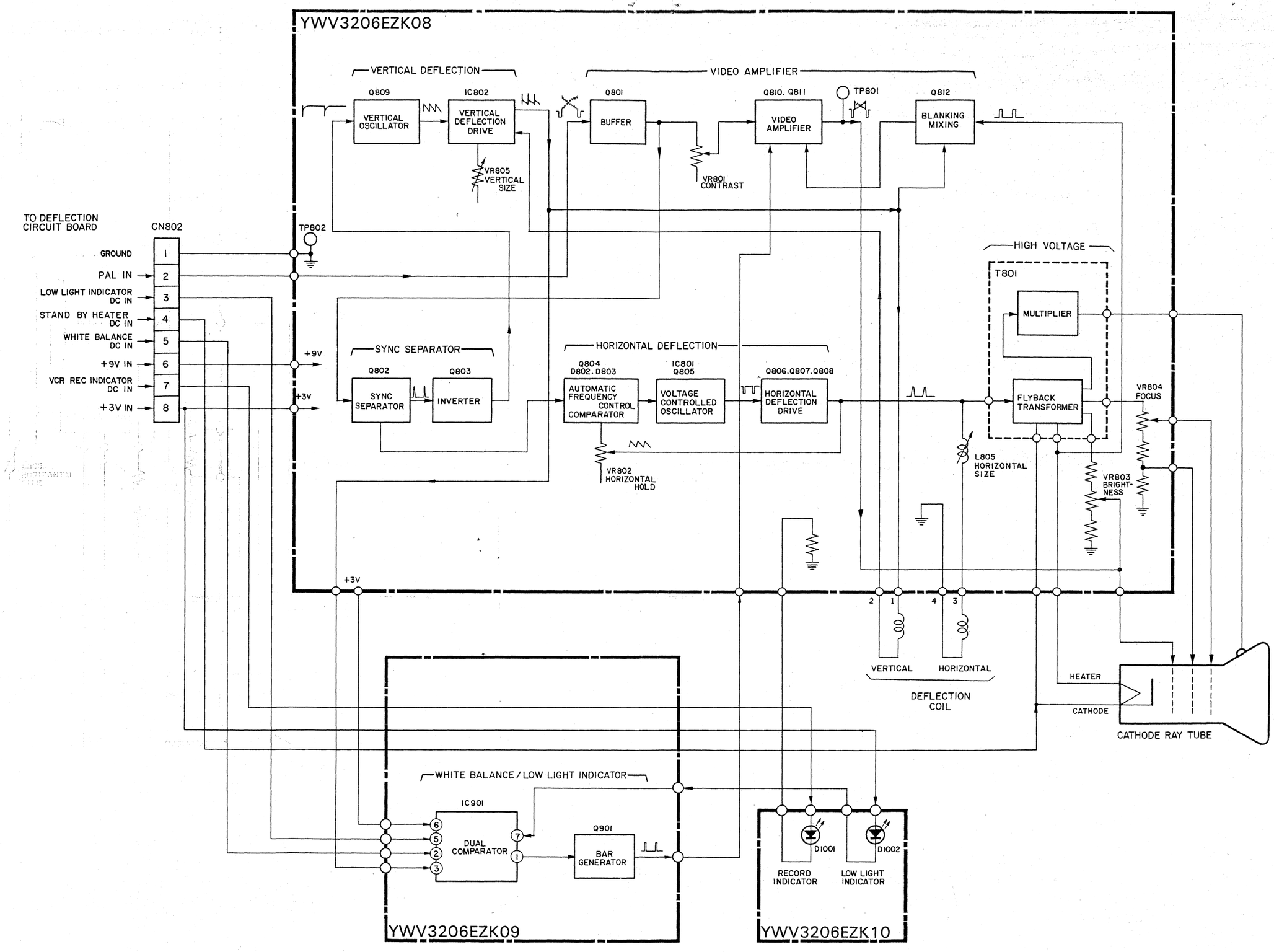

BLOCK DIAGRAM OF DEFLECTION C

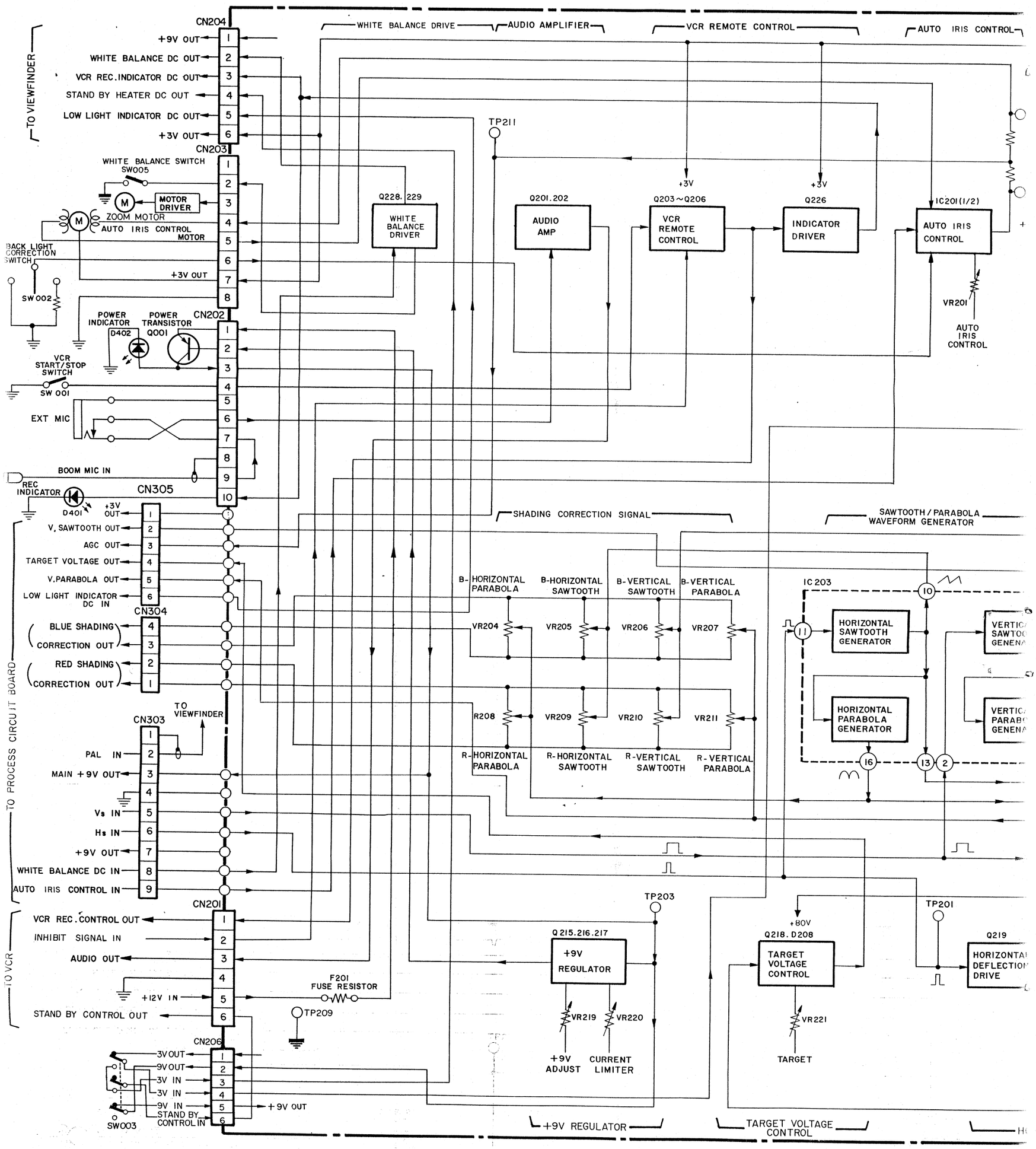

CIRCUIT BOARD (YWV3201EZK02)

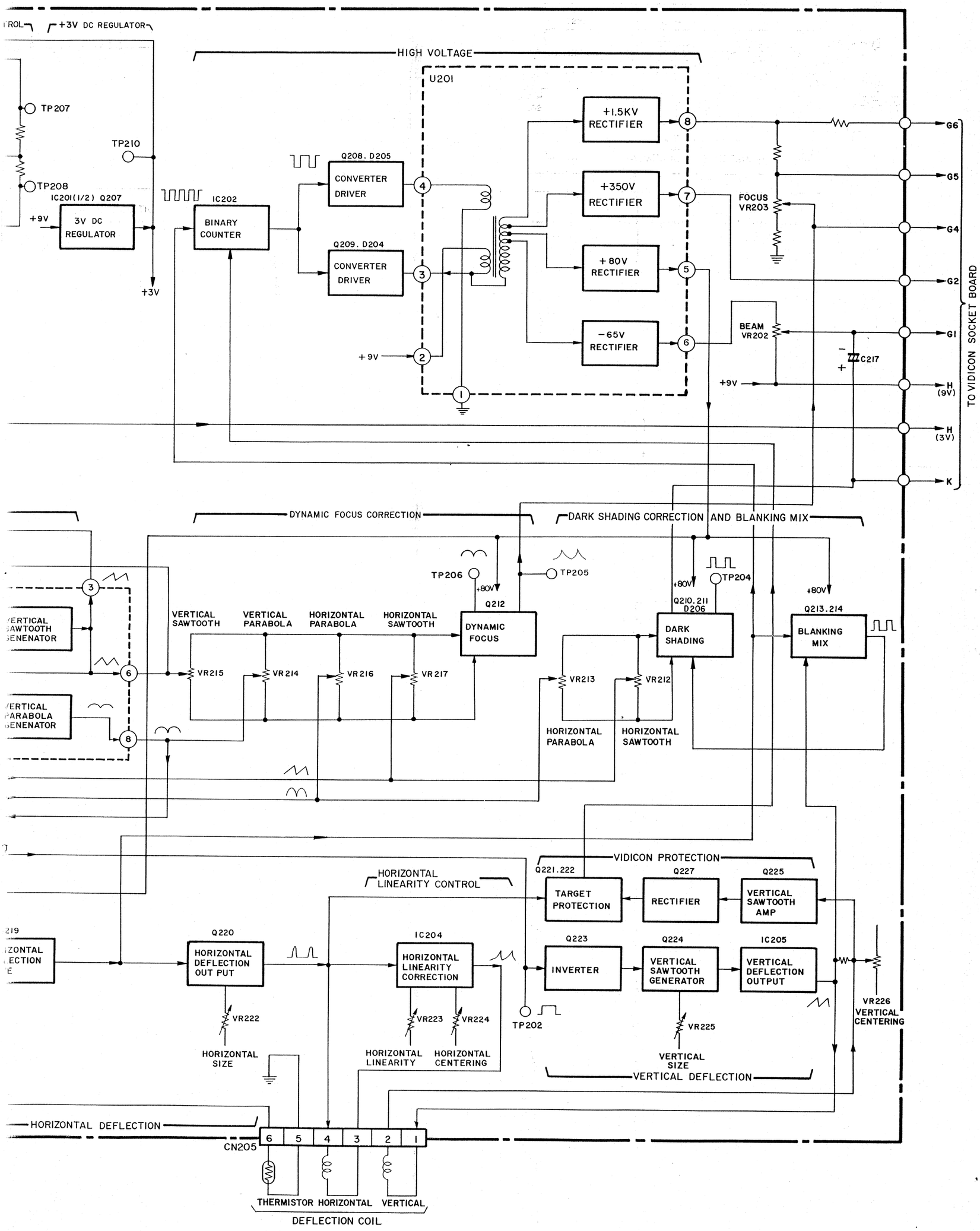

BLOCK DIAGRAM OF PROCESS CIRC

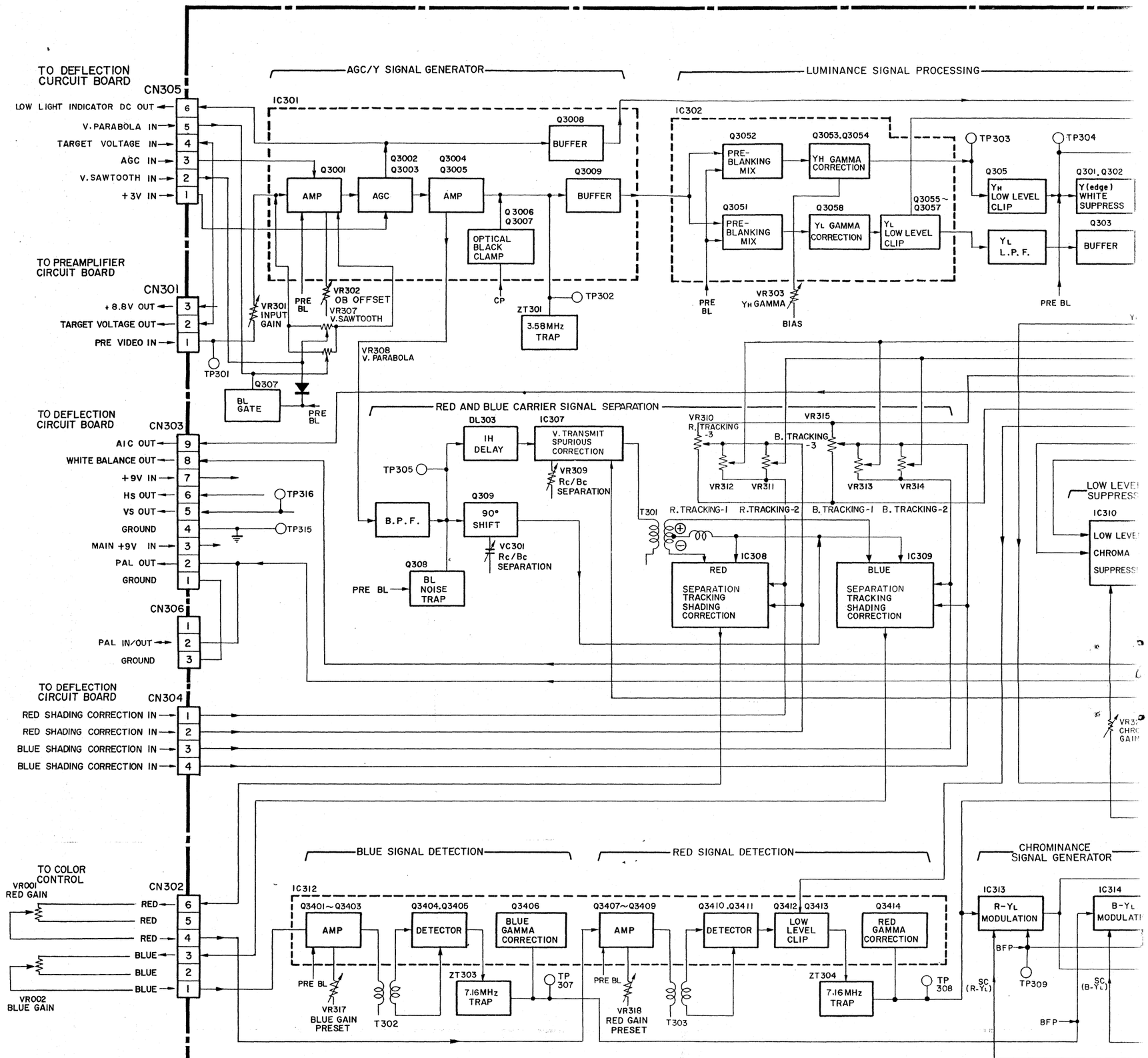

ABBREVIATIONS

AGC	AUTOMATIC GAIN CONTROL	D.HD	DELAYED HORIZONTAL DRIVE PULSE
AIC	AUTOMATIC IRIS CONTROL	Hs	HORIZONTAL SCANNING START PULSE
AMP	AMPLIFIER	L.P.F	LOW PASS FILTER
BL	BLANKING	PRE BL	PREBLANKING PULSE
B.P.F	BAND PASS FILTER	Rc	RED CARRIER SIGNAL
BFP	BURST FLAG PULSE	Vs	VERTICAL SCANNING START PULSE
Bc	BLUE CARRIER SIGNAL	SC(B-YL)	SUBCARRIER FOR B-YL
CP	CLAMP PULSE	SC(R-YL)	SUBCARRIER FOR R-YL

CIRCUIT BOARD (YWV3201EZK03)

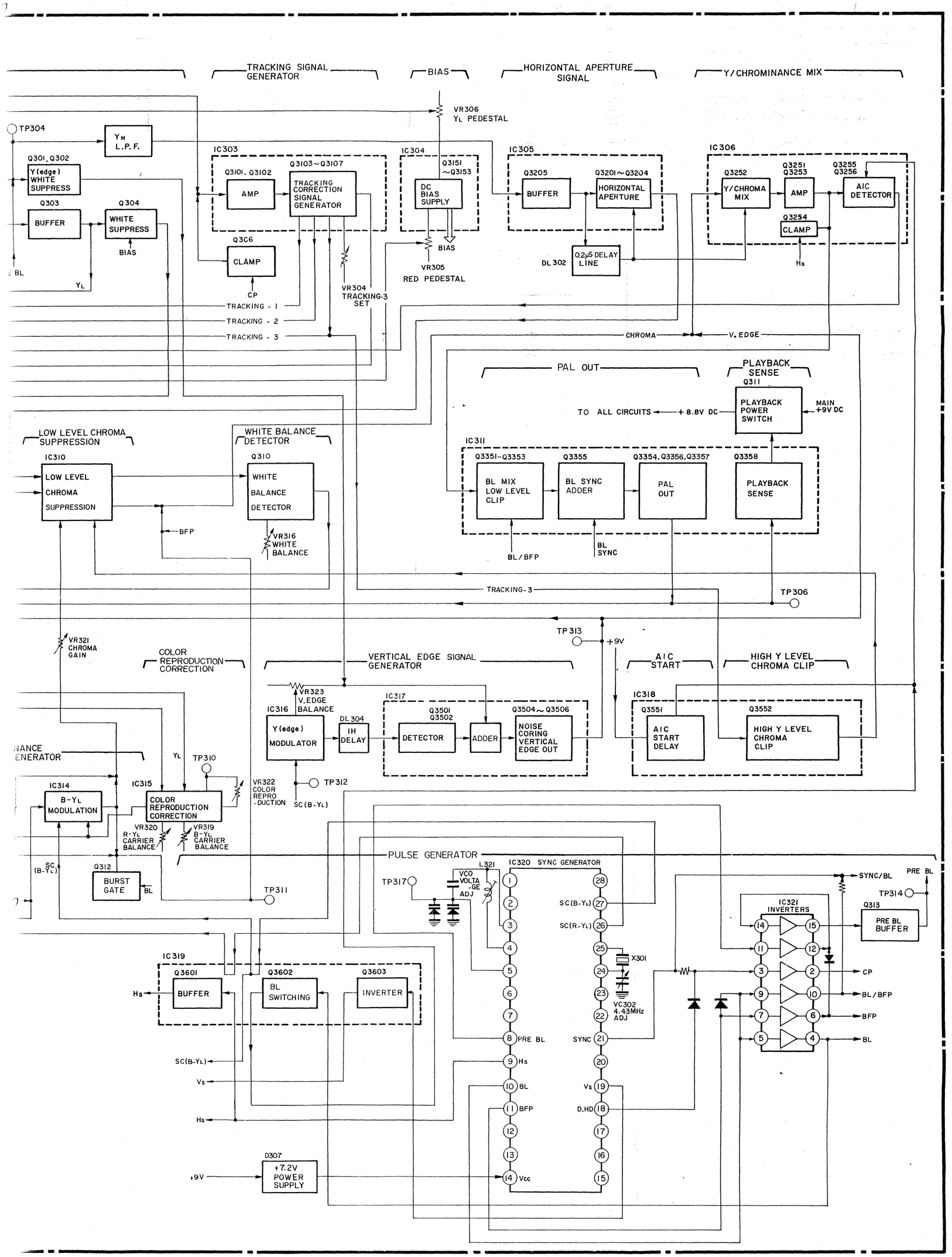

WIRING DIAGRAM

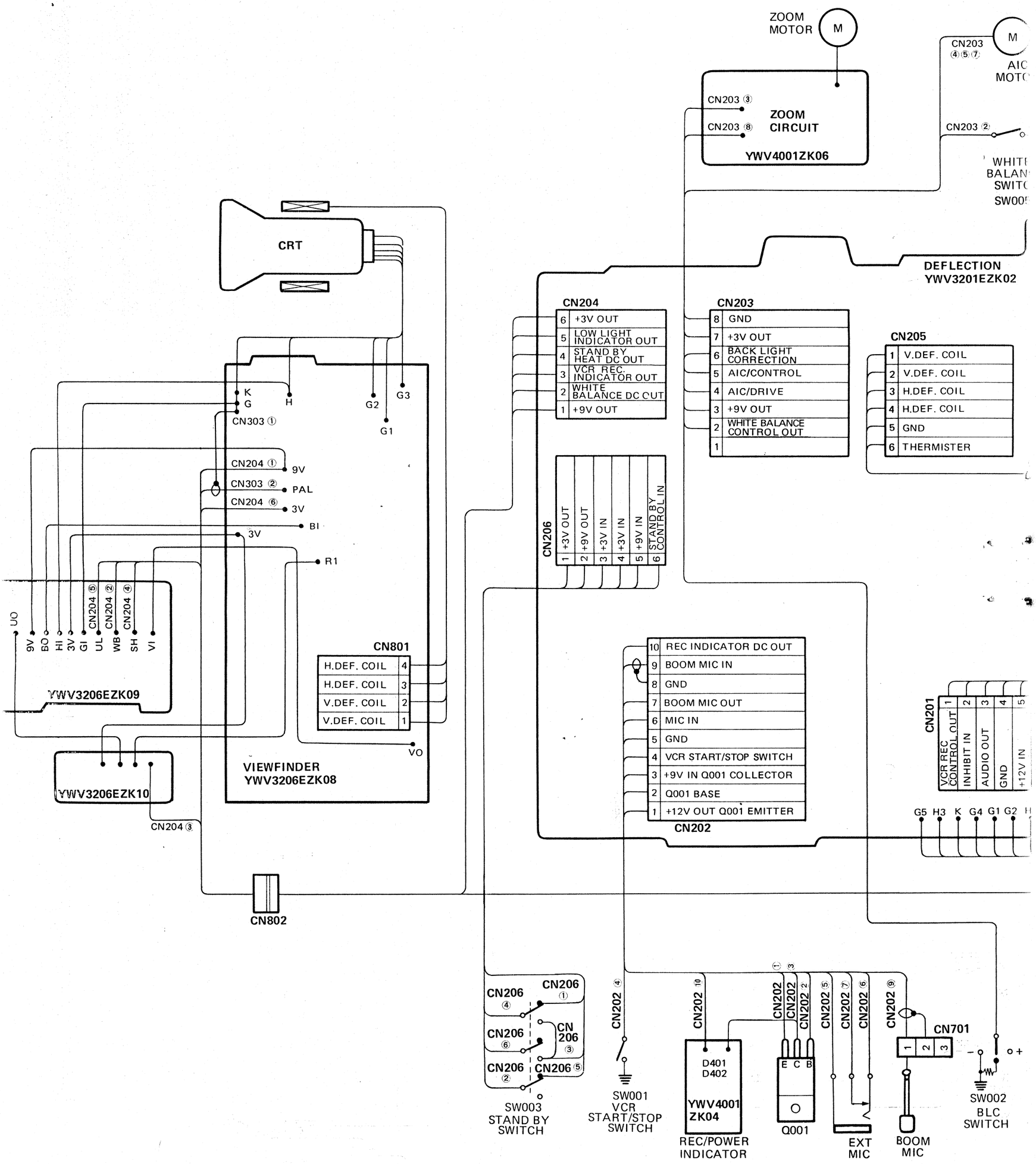

GRAM

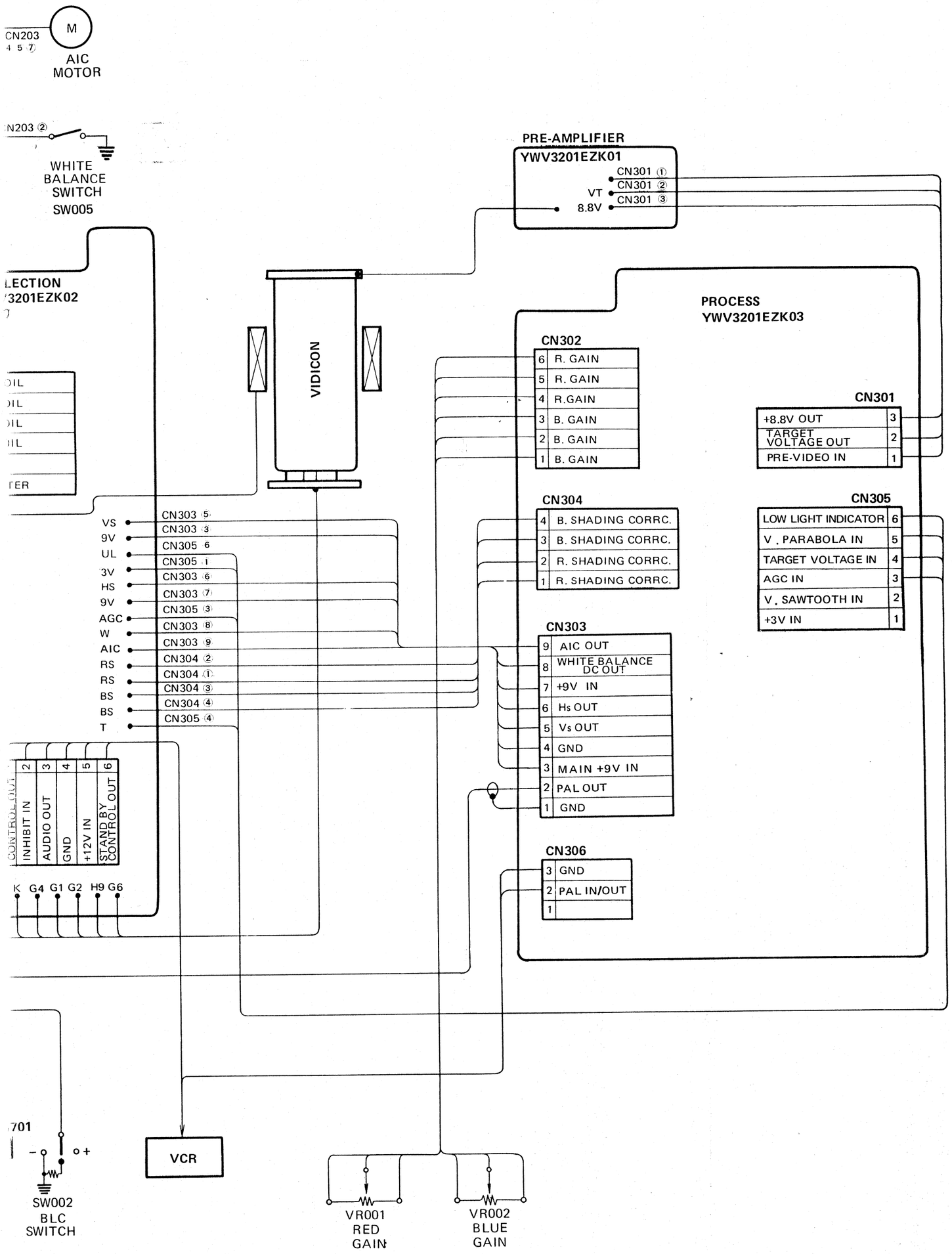
CN203
4 5 7
M
AIC MOTOR
N203 ②
WHITE BALANCE SWITCH
SW005
PRE-AMPLIFIER
YWV3201EZK01
CN301 ①
CN301 ②
VT
CN301 ③
8.8V
LECTION
3201EZK02
VIDICON
PROCESS
YWV3201EZK03
CN302
6 R. GAIN
5 R. GAIN
4 R.GAIN
3 B. GAIN
2 B. GAIN
1 B. GAIN
CN301
+8.8V OUT 3
TARGET VOLTAGE OUT 2
PRE-VIDEO IN 1
CN304
4 B. SHADING CORRC.
3 B. SHADING CORRC.
2 R. SHADING CORRC.
1 R. SHADING CORRC.
CN305
LOW LIGHT INDICATOR 6
V. PARABOLA IN 5
TARGET VOLTAGE IN 4
AGC IN 3
V. SAWTOOTH IN 2
+3V IN 1
CN303
9 AIC OUT
8 WHITE BALANCE DC OUT
7 +9V IN
6 Hs OUT
5 Vs OUT
4 GND
3 MAIN +9V IN
2 PAL OUT
1 GND
CN306
3 GND
2 PAL IN/OUT
1
VS CN303 ⑤
9V CN303 ③
UL CN305 ⑥
3V CN305 ①
HS CN303 ⑥
9V CN303 ⑦
AGC CN305 ③
W CN303 ⑧
AIC CN303 ⑨
RS CN304 ②
RS CN304 ①
BS CN304 ③
BS CN304 ④
T CN305 ④
CONTROL OUT
2 INHIBIT IN
3 AUDIO OUT
4 GND
5 +12V IN
6 STAND BY CONTROL OUT
K G4 G1 G2 H9 G6
701
SW002 BLC SWITCH
VCR
VR001 RED GAIN
VR002 BLUE GAIN

CONDUCTOR VIEW OF ELECTRO

NJM2903D
HA17555PS

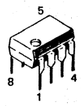

AN374P

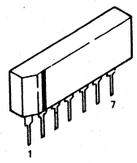

2SA564-RS
2SC828-RS

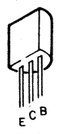

2SC1567A-QR
2SC1566

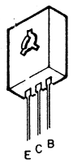

3SF11–Q

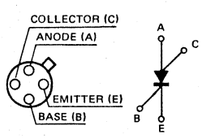

YUDERB12–01

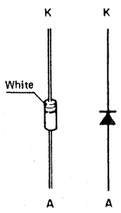

XZ-062

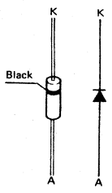

YUDUF1

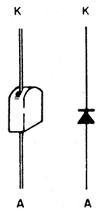

MA26

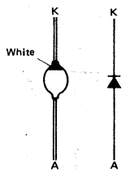

MA150

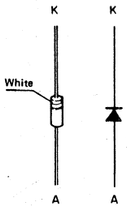

LN43SYP

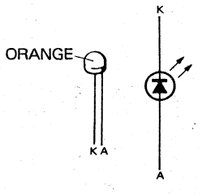

LN23SRP

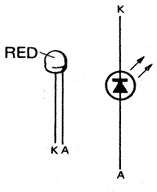

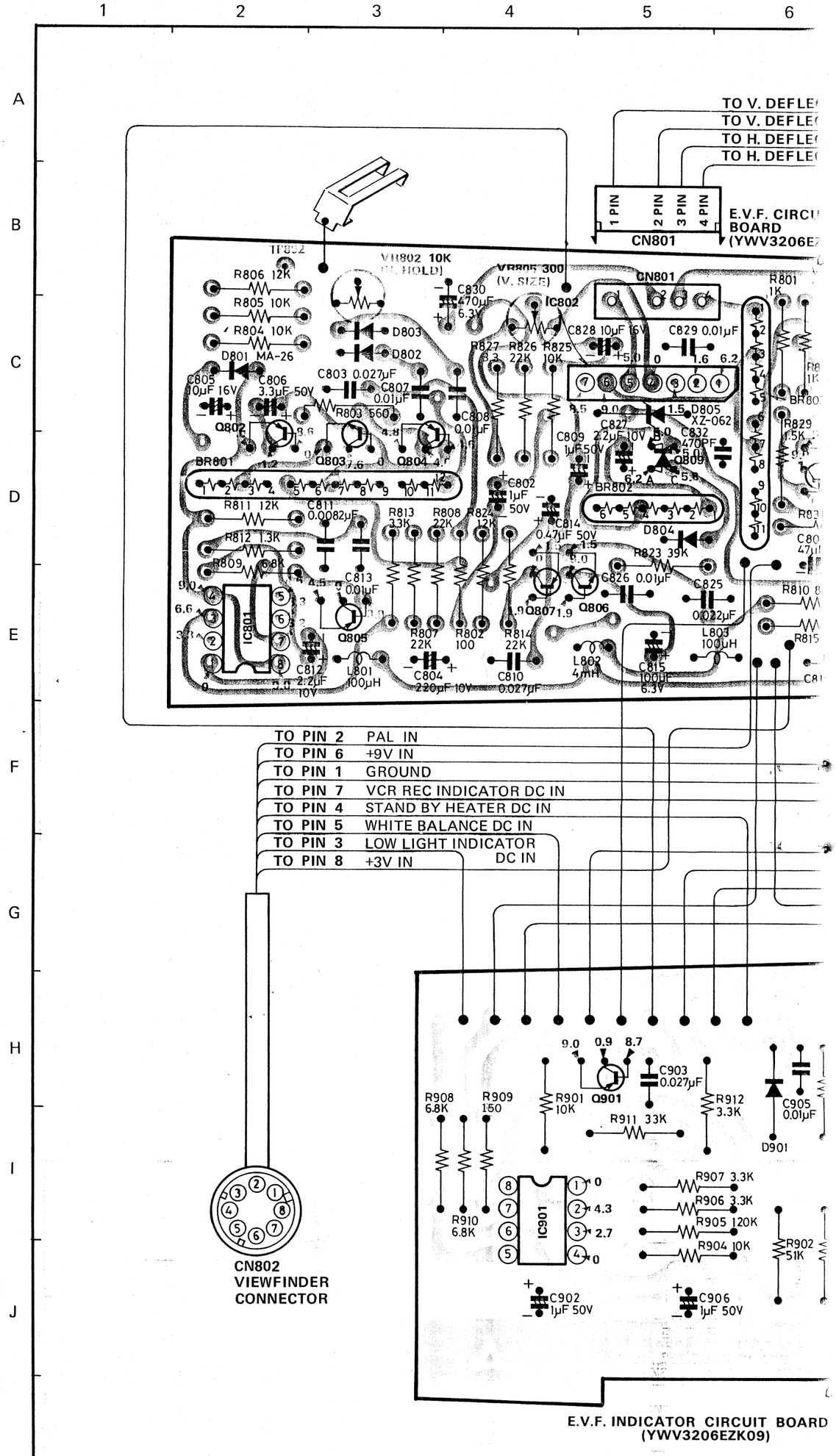

TRONIC VIEWFINDER (YWV3206EZK08, ZK09, ZK10)

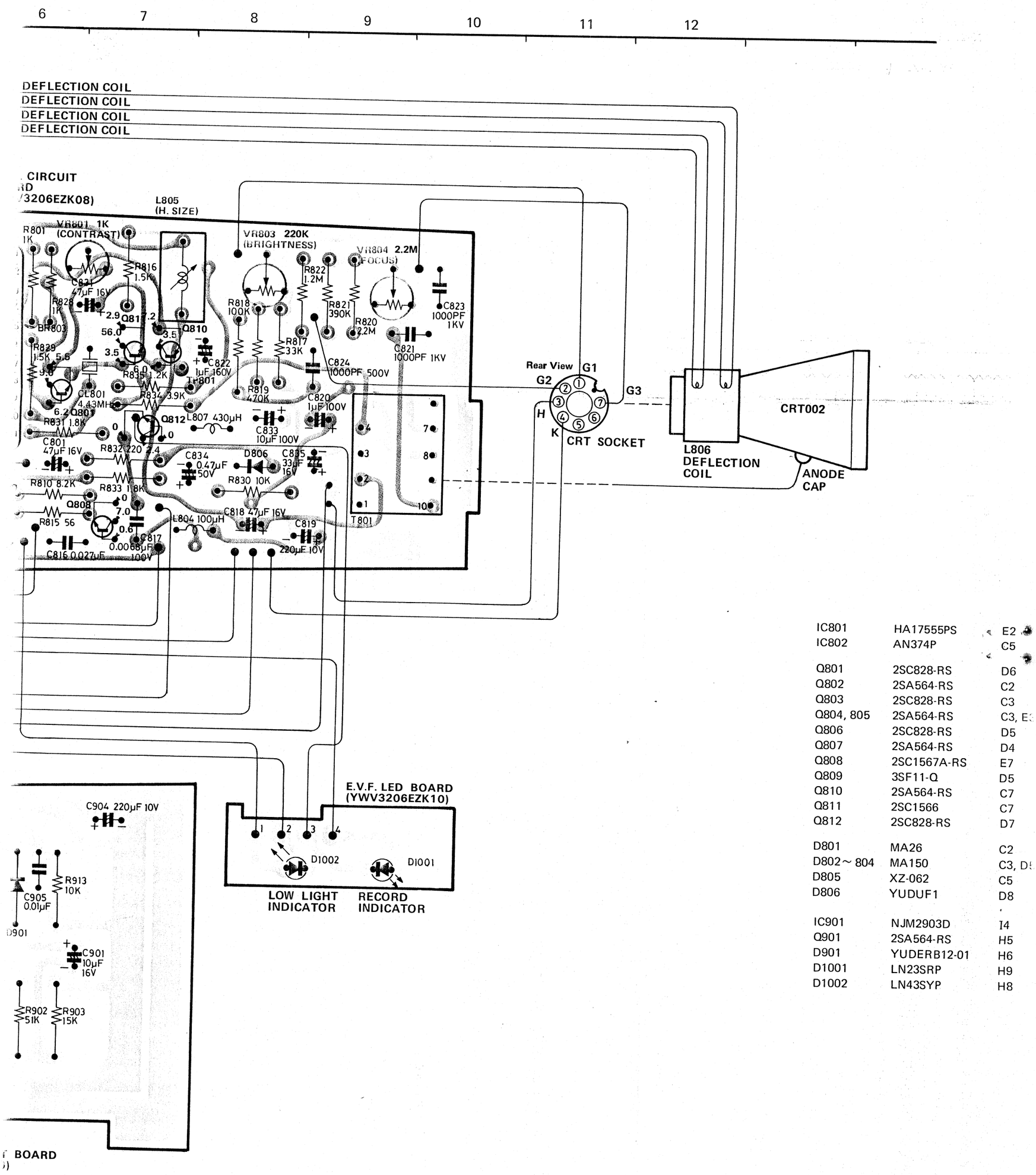

IC801	HA17555PS	E2
IC802	AN374P	C5
Q801	2SC828-RS	D6
Q802	2SA564-RS	C2
Q803	2SC828-RS	C3
Q804, 805	2SA564-RS	C3, E
Q806	2SC828-RS	D5
Q807	2SA564-RS	D4
Q808	2SC1567A-RS	E7
Q809	3SF11-Q	D5
Q810	2SA564-RS	C7
Q811	2SC1566	C7
Q812	2SC828-RS	D7
D801	MA26	C2
D802～804	MA150	C3, D
D805	XZ-062	C5
D806	YUDUF1	D8
IC901	NJM2903D	I4
Q901	2SA564-RS	H5
D901	YUDERB12-01	H6
D1001	LN23SRP	H9
D1002	LN43SYP	H8

EXB-H88074J

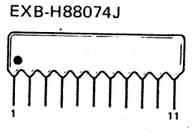

EXB-H85104J

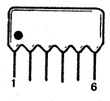

EXB-H89075J

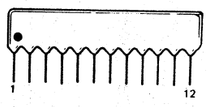

SCHEMATIC DIAGRAM OF ELECTRONIC

8–1 0.2V/DIV 10μsec/DIV

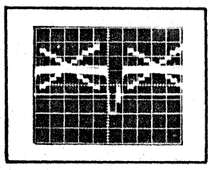

8–2 2V/DIV 20μsec/DIV

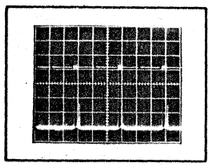

8–3 2V/DIV 20μsec/DIV

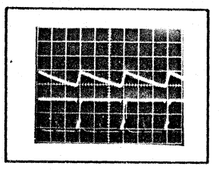

8–4 2V/DIV 20μsec/DIV

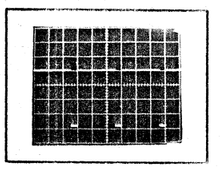

8–5 20V/DIV 20μsec/DIV

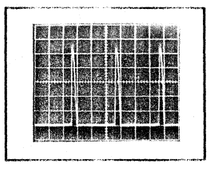

8–6 2V/DIV 5m sec/DIV

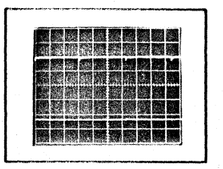

8–7 0.05V/DIV 5m sec/DI

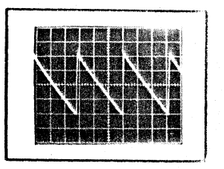

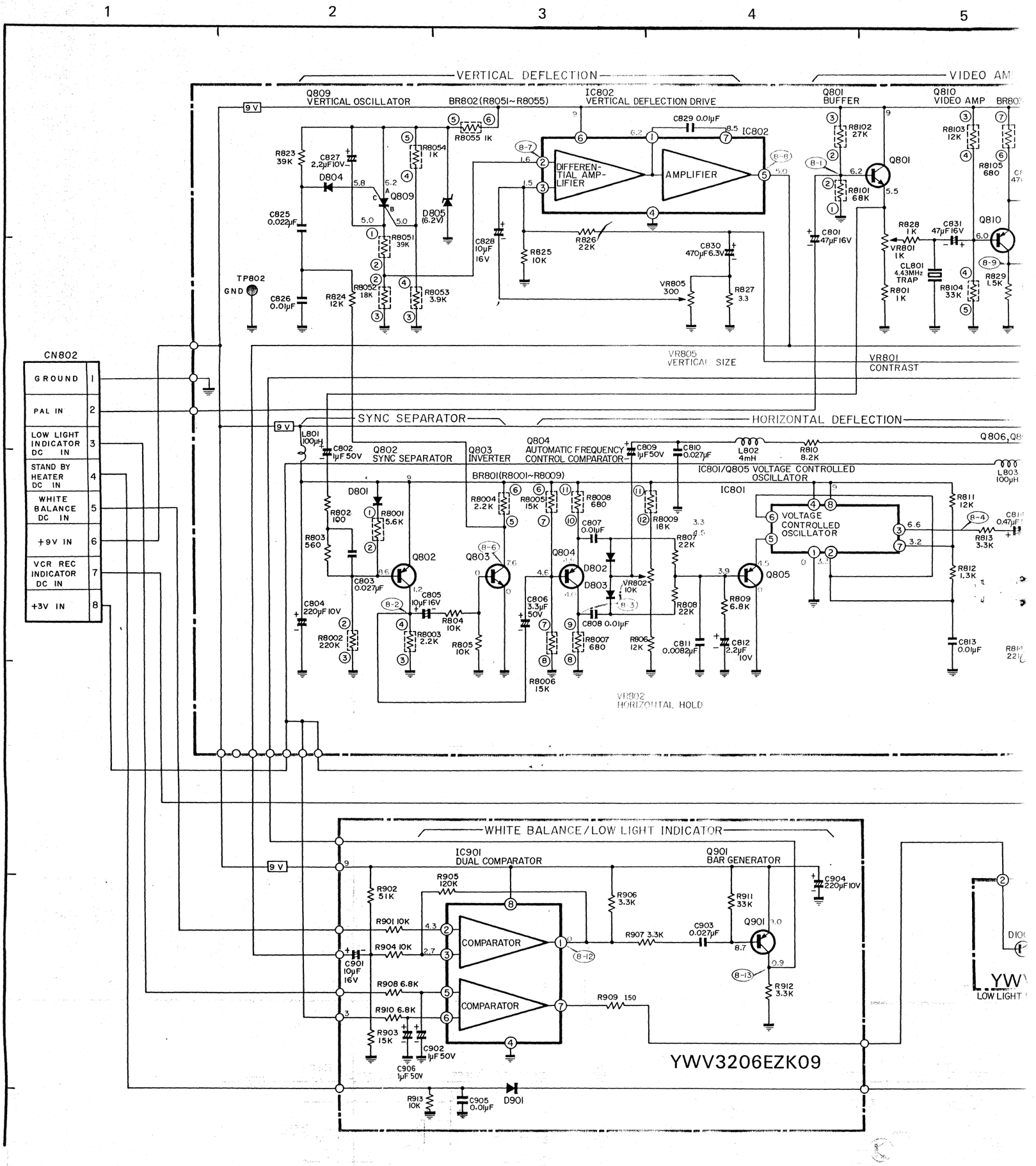

NJM2903D

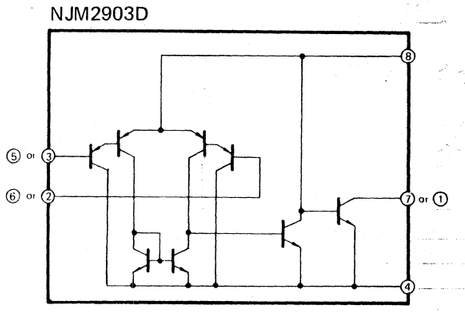

PRODUCT SAFETY NOTE

The shaded area on this schematic diagram incorporates special features important for protection from X-Radiation, fire and electrical shock hazards when servicing it is essential that only manufacturer's specified parts be used for the critical components in the shaded areas of the schematic.

Notes:
1. Do not order components by Part No. written on schematic diagram or conductor view of P.C.B. Use replacement parts list.
2. DC voltages are measured with digital volt meter to chassis.

ONIC VIEWFINDER (YWV3206EZK08, ZK09, ZK10)

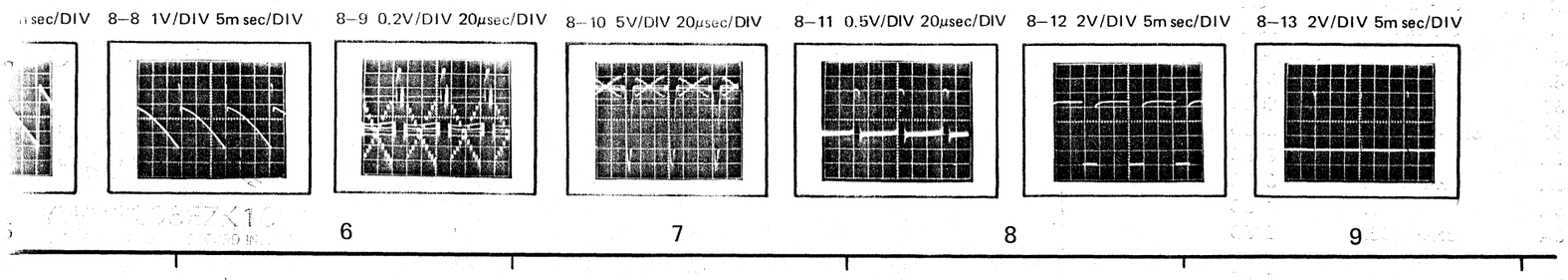

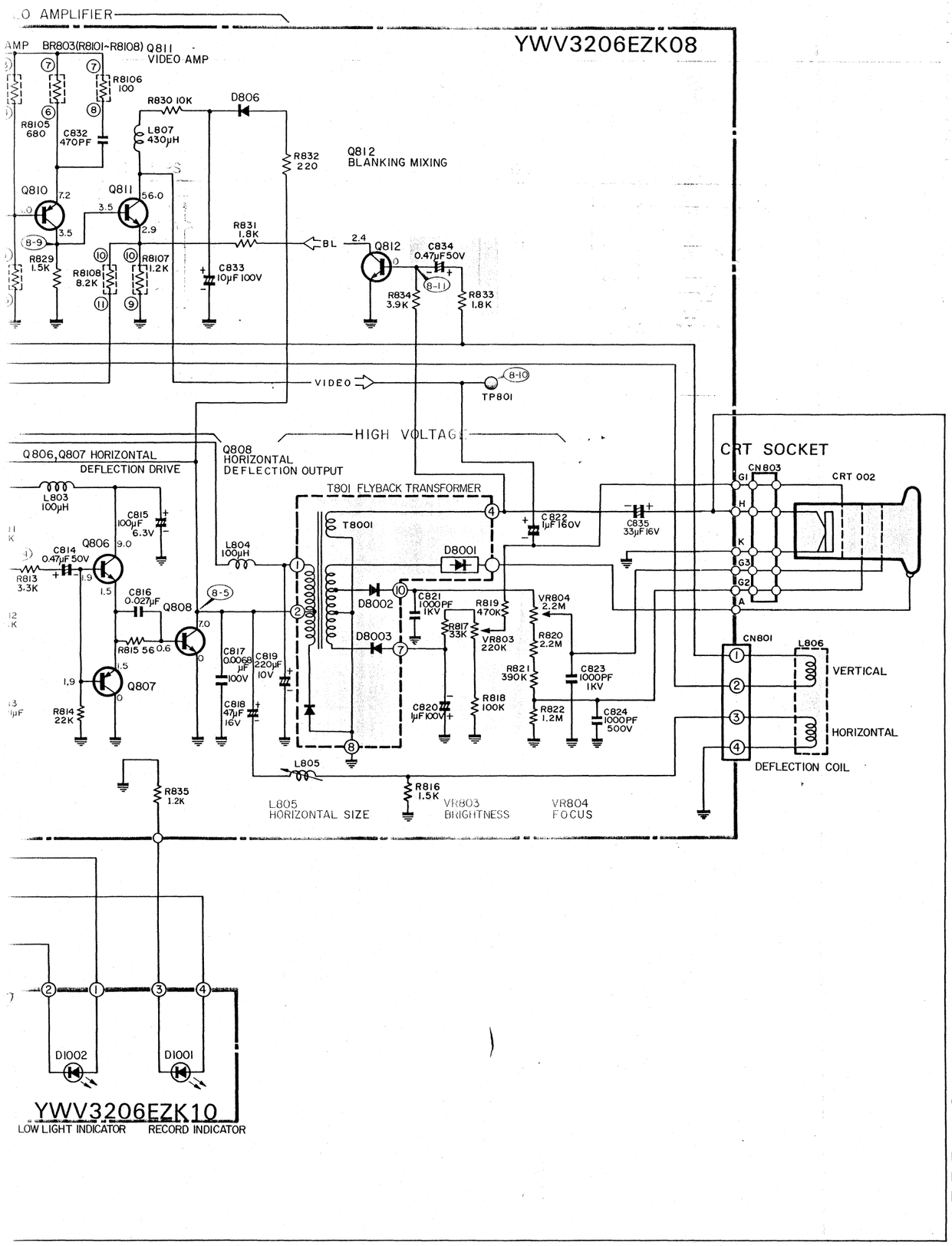

IC801	HA17555PS	C4
IC802	AN374P	A3
Q801	2SC828-RS	A5
Q802	2SA564-RS	C2
Q803	2SC828-RS	C3
Q804, 805	2SA564-RS	C3, C4
Q806	2SC828-RS	C5
Q807	2SA564-RS	C5
Q808	2SC1567A-RS	C6
Q809	3SF11-Q	A2
Q810	2SA564-RS	A5
Q811	2SC1566	A5
Q812	2SC828-RS	A6
D801	MA26	C2
D802 ~ 804	MA150	C3, C3, A2
D805	XZ-062	A3
D806	YUDUF1	A6
IC901	NJM2903D	E3
Q901	2SA564-RS	E4
D901	YUDERB12-01	E3
D1001	LN23SRP	E6
D1002	LN43SYP	E5

HA17555PS

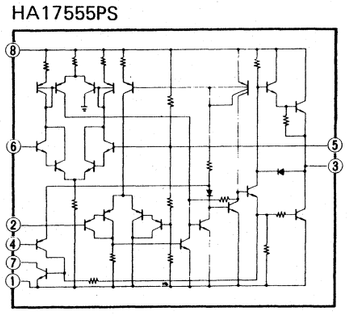

AN374P

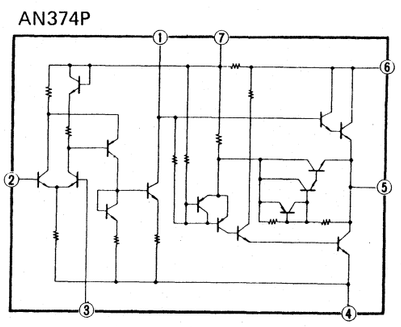

CONDUCTOR VIEW OF DEFLECTION CI

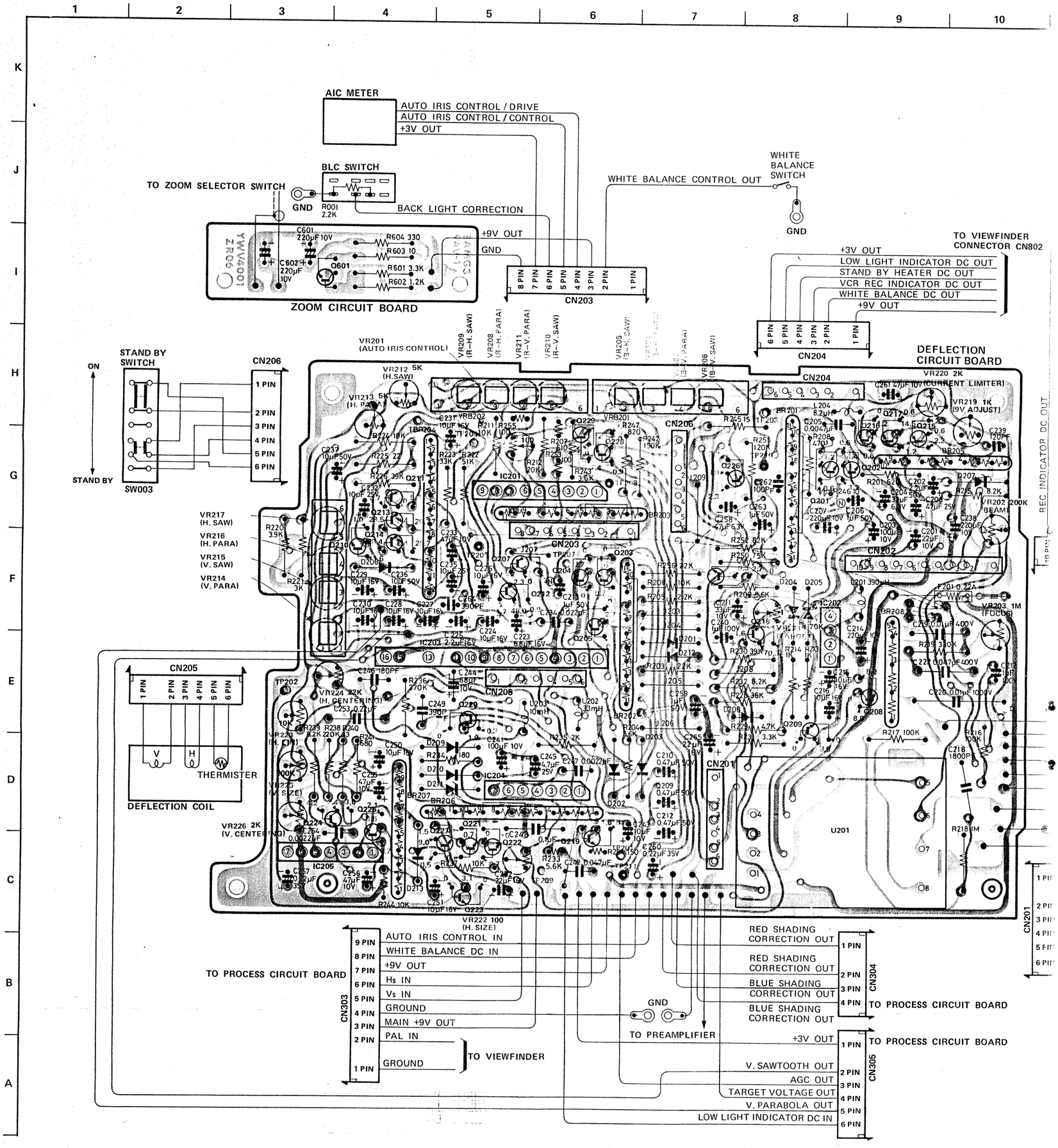

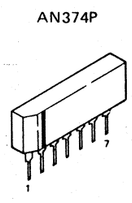

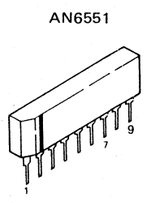

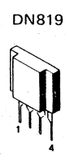

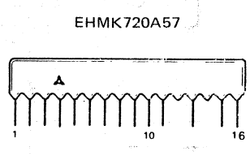

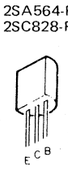

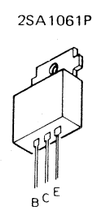

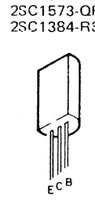

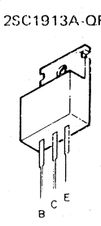

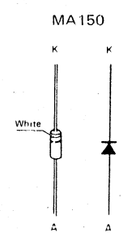

)N CIRCUIT BOARD (YWV3201EZK02)

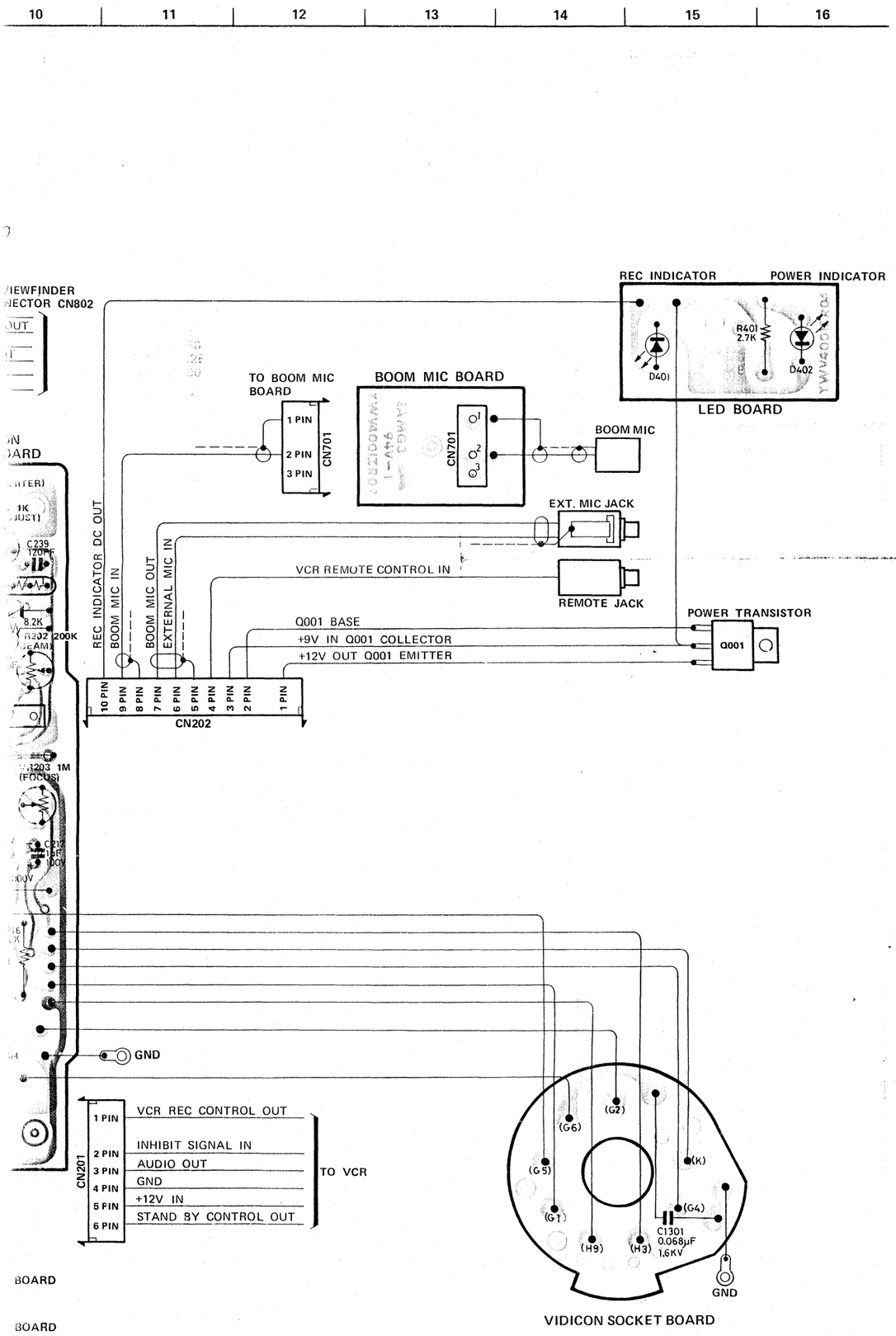

IC201	AN-6551	G5
IC202	DN819	E8
IC203	EHMK720A57	E5
IC204, 205	AN374P	D5, C3
Q201, 202	2SC1327-TU	G8
Q203	2SC828-QR	F6
Q204	2SC1047-CD	F6
Q205, 206	2SC828-QR	F6, F7
Q207, 208	2SA684-RS	F5, E9
Q209	2SC1384-RS	E8
Q210	2SC1573-QR	F4
Q211	2SA564A-QR	G4
Q212	2SC1573-QR	F5
Q213, 214	2SA564A-QR	F4
Q215	2SA721-TU	G9
Q216	2SC828-RS	G9
Q217	2SC828-QR	G9
Q218	2SC1573-QR	E8
Q219	2SC1317-QR	C6
Q220	2SC1913A-QR	E5
Q221 ~ 223	2SC828-RS	C5, C5, C5
Q224	2SA721-TU	C3
Q225	2SC828-RS	C4
Q226	2SA564-RS	G7
Q227	2SC828-QR	C5
Q228	2SC1327-TU	G6
Q229	2SC828-QR	G6
D201	MA150	F7
D202, 203	MA150	D6
D204, 205	MA150	F8
D206	MA150	F4
D207	YUDYZ062E	G9
D208	MA26	E7
D209, 210	MA150	D5
D211	YUDXZ-070	D5
D212, 213	MA150	F7, C4
U201	YWHI-PACK3	D9
D401, 402	LN23SRP	I15
Q601	2SC1317-QR	I3
Q001	2SA1061-P	F15

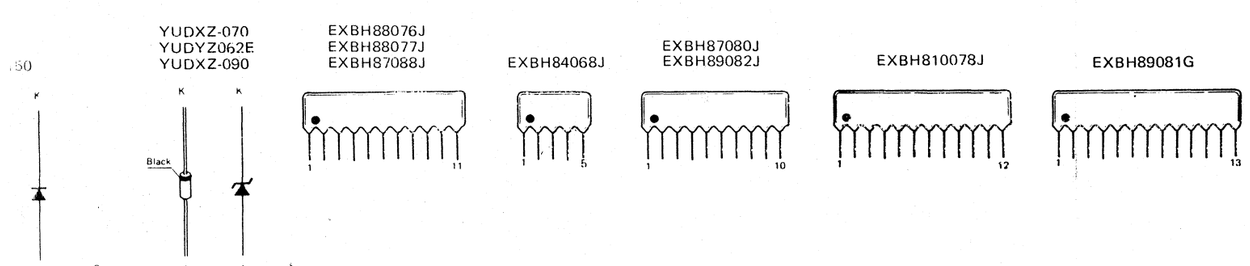

SCHEMATIC DIAGRAM OF DEFLECTION CIRCU

2–1 0.05V/DIV 20μsec/DIV

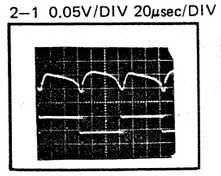

2–2 10V/DIV 20μsec/DIV

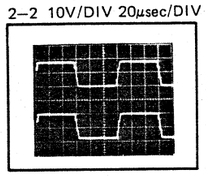

2–3 1V/DIV 10μsec/DIV

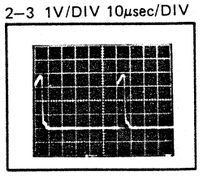

2–4 0.5V/DIV 2m sec/DIV

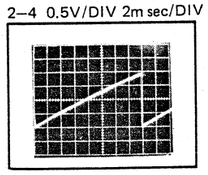

2–5 0.5V/DIV 2m sec/DIV

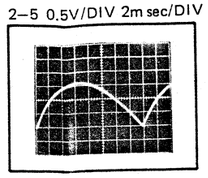

2–6 1V/DIV 2m sec/DIV

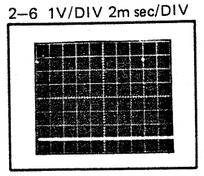

2–7 0.5V/DIV 10μsec/DIV

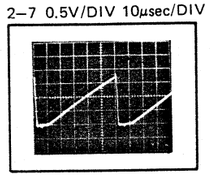

2–8 0.5V/DIV 10μsec/DIV

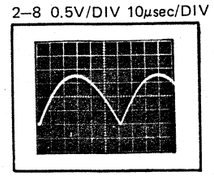

2–9 5V/DIV 2m sec/DIV

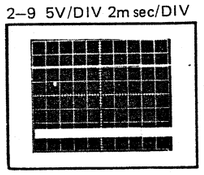

2–10 5V/DIV 2m sec/DIV

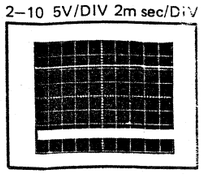

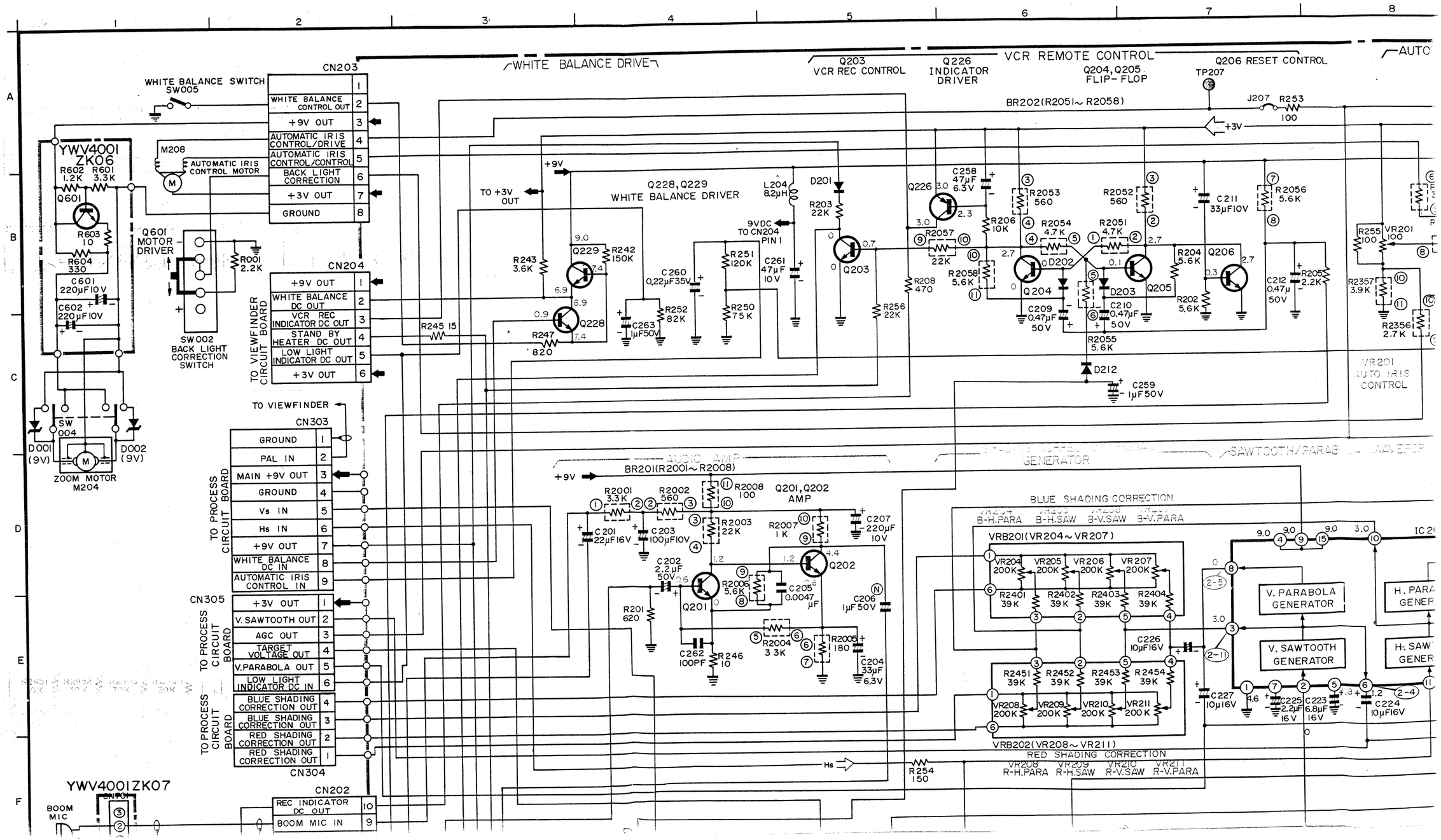

DEFLECTION CIRCUIT BOARD (YWV3201EZK02)

2–9 5V/DIV 2m sec/DIV

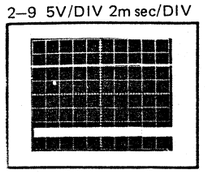

2–10 5V/DIV 2m sec/DIV

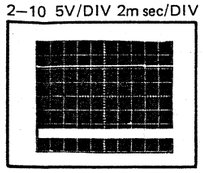

2–11 0.5V/DIV 2m sec/DIV

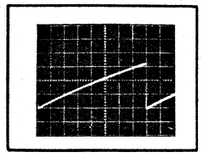

2–12 0.1V/DIV 2m sec/DIV

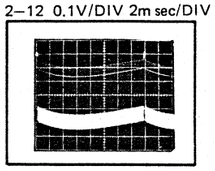

2–13 2V/DIV 2m sec/DIV

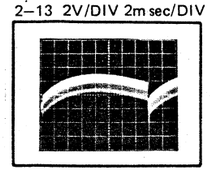

2–14 50V/DIV 10μsec/DIV

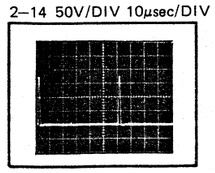

2–15 0.5V/DIV 10μsec/DIV

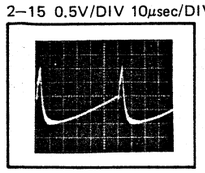

2–16 0.1V/DIV 10μsec/DIV

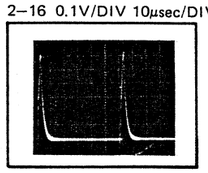

2–17 0.2V/DIV 10μsec/DIV

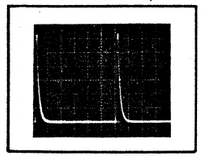

2–18 0.2V/DIV 2m sec/DIV

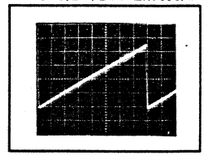

2–19 1V/DIV 2m sec/DIV

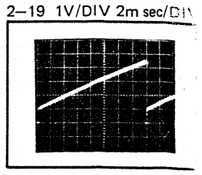

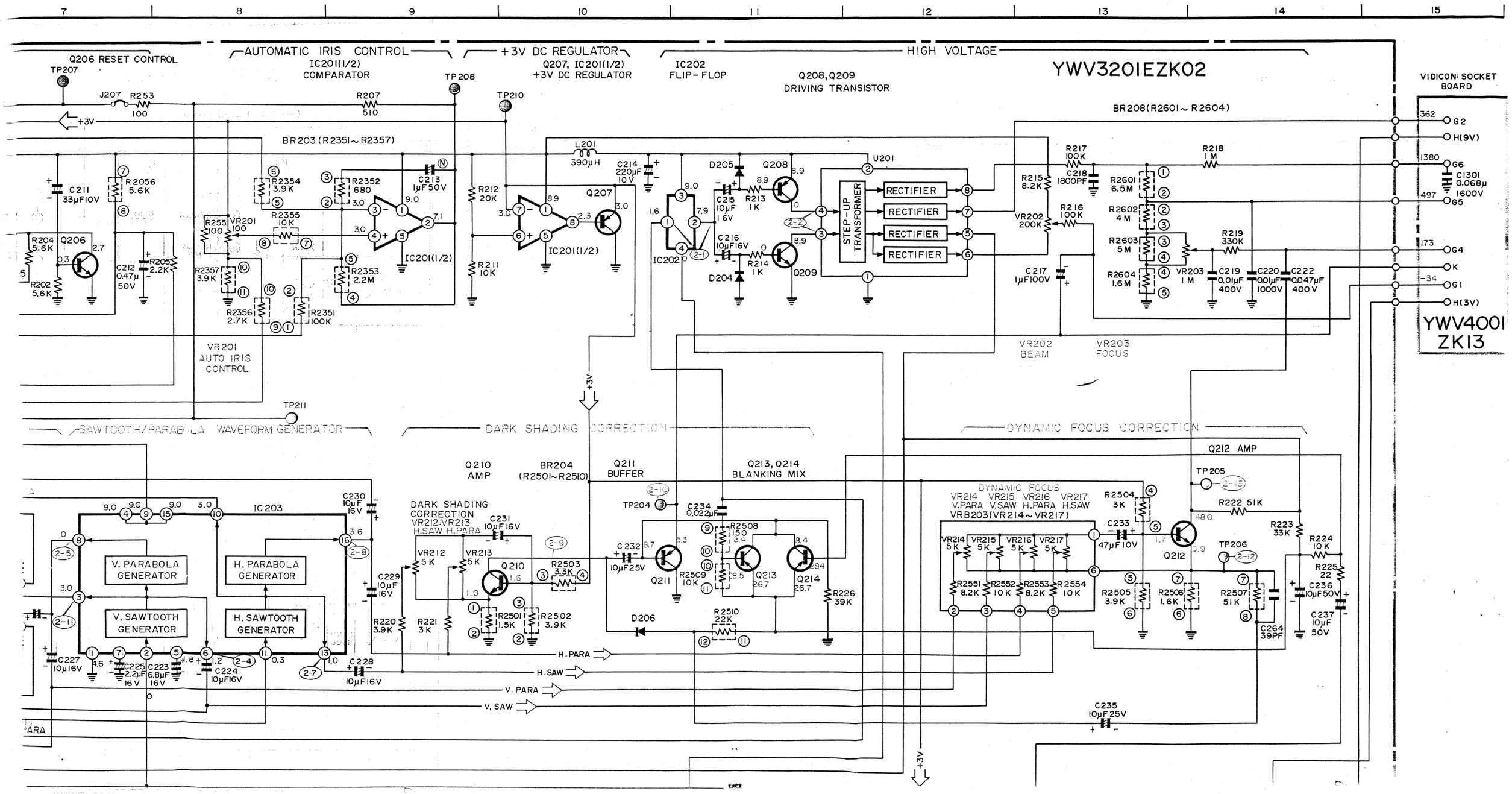

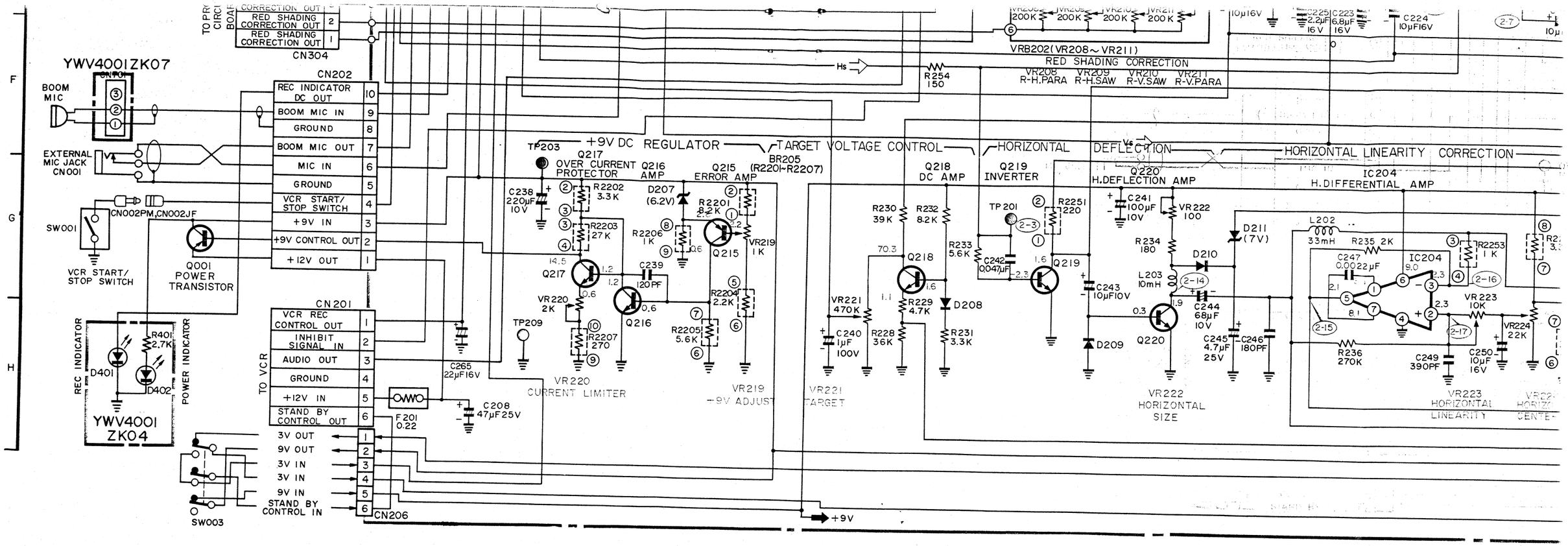

PRODUCT SAFETY NOTE

The shaded area on this schematic diagram incorporates special features important for protection from X-Radiation, fire and electrical shock hazards when servicing it is essential that only manufacturer's specified parts be used for the critical components in the shaded areas of the schematic.

Notes:
1. Do not order components by Part No. written on schematic diagram or conductor view of P.C.B. Use replacement parts list.
2. DC voltages are measured with digital volt meter to chassis.

DN819

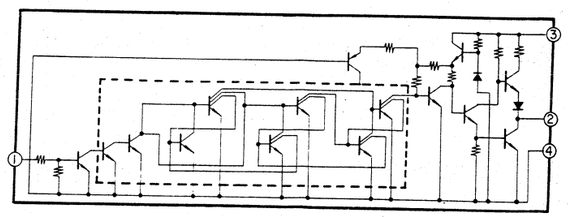

YWHI-PACK3

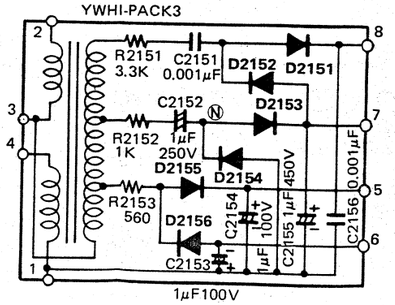

AN-6551

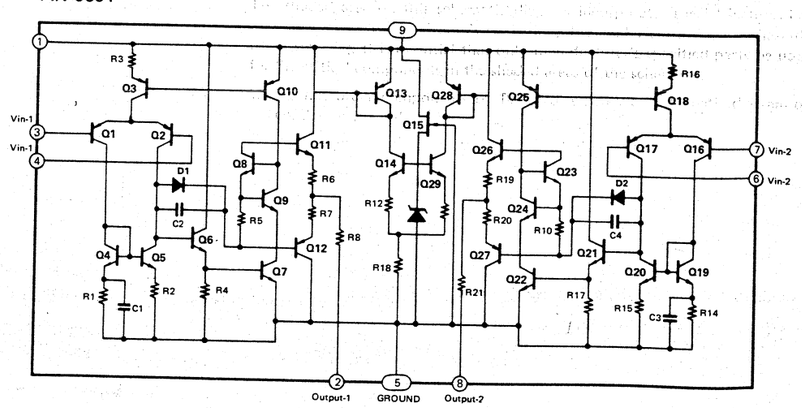

AN374P

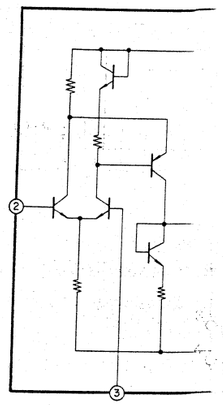

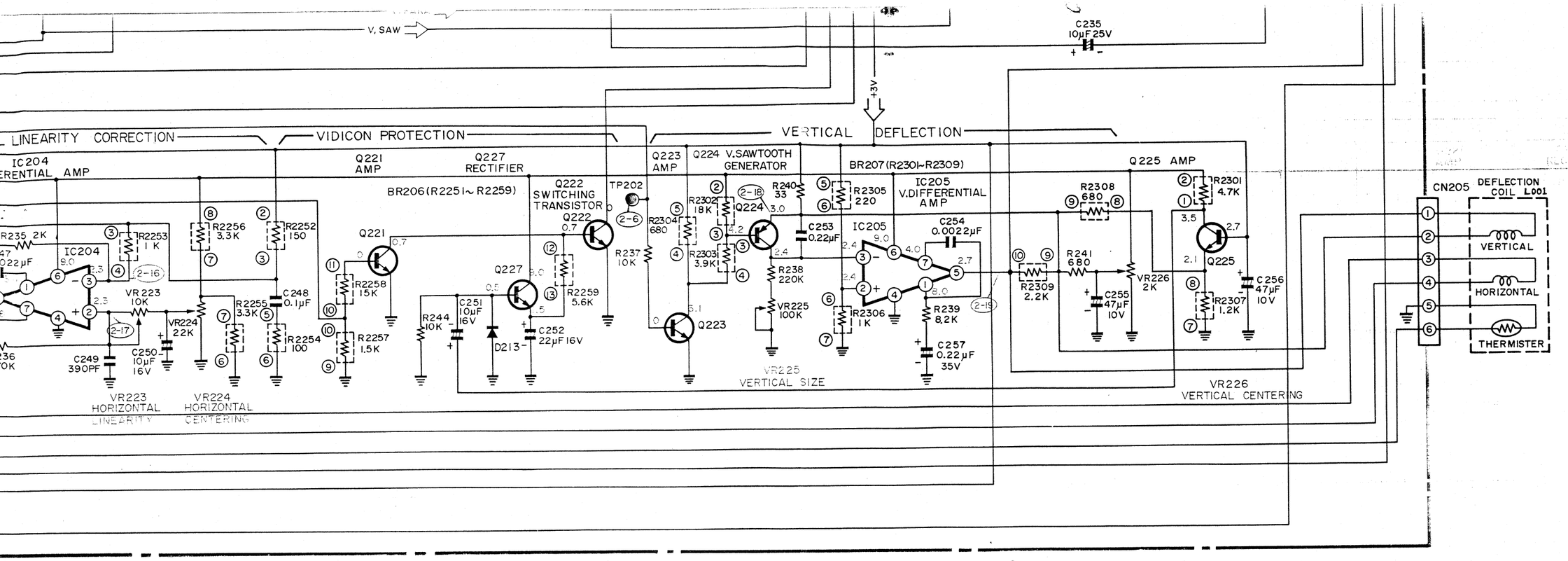

AN374P

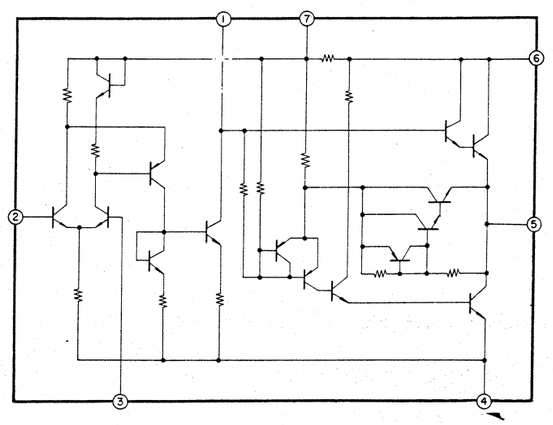

EHMK720A57

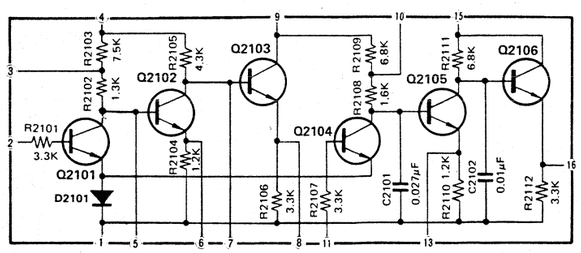

IC201	AN-6551	B9, 10
IC202	DN819	B11
IC203	EHMK720A57	E8
IC204, 205	AN374P	G8, G12
Q001	2SA1061-P	G1
Q201, 202	2SC1327-TU	D4, 5
Q203	2SC828-QR	B5
Q204	2SC1047-CD	B6
Q205, 206	2SC828-QR	B7
Q207, 208	2SA684-RS	B10, 11
Q209	2SC1384-RS	B11
Q210	2SC1573-QR	E9
Q211	2SA564A-QR	E10
Q212	2SC1573-QR	D13
Q213, 214	2SA564A-QR	E11
Q215	2SA721-TU	G4
Q216	2SC828-RS	G4
Q217	2SC828-QR	G3

Q218	2SC1573-QR	G5
Q219	2SC1317-QR	G6
Q220	2SC1913A-QR	G7
Q221 ~ 223	2SC828-RS	G9, G10, G11
Q224	2SA721-TU	G11
Q225	2SC828-RS	G14
Q226	2SA564-RS	B6
Q227	2SC828-QR	G10
Q228	2SC1327-TU	B3
Q229	2SC828-QR	B4
Q601	2SC1317-QR	B1
D201	MA150	B5
D202, 203	MA150	B6
D204, 205	MA150	B11
D206	MA150	E10
D207	YUDYZ062E	G4
D208	MA26	G5
D209, 210	MA150	H6, G7
D211	YUDXZ-070	G7
D212, 213	MA150	C6, H10
D401, 402	LN23SRP	H1
D001, 002	YUDXZ-090	C1

SCHEMATIC DIAGRAM OF PROCESS CIRC

3-1 0.2V/DIV 10μsec/DIV

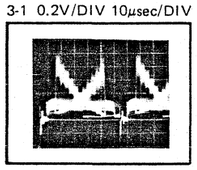

3-2 0.5V/DIV 10μsec/DIV

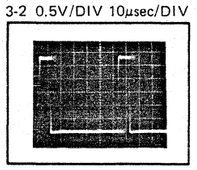

3-3 1V/DIV 10μsec/DIV

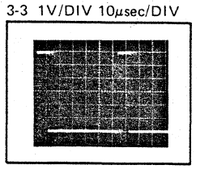

3-4 1V/DIV 10μsec/DIV

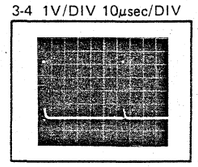

3-5 0.2V/DIV 10μsec/DIV

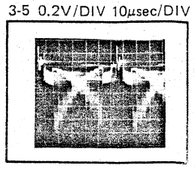

3-6 0.2V/DIV 10μsec/DIV

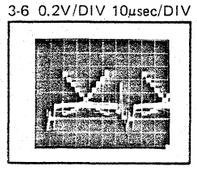

3-7 0.2V/DIV 10 μsec/DIV

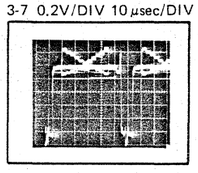

3-8 0.1V/DIV 10μsec/DIV

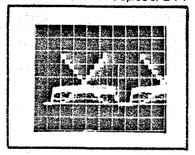

3-9 0.1V/DIV 10μsec/DIV

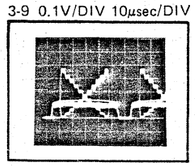

3-10 0.05V/DIV 10μsec/DIV

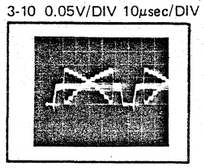

3-11 0.1V/

3-21 0.05V/DIV 10μsec/DIV

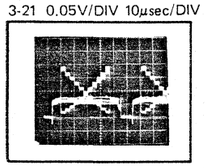

3-22 2V/DIV 10μsec/DIV

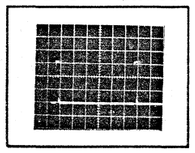

3-23 0.2V/DIV 10μsec/DIV

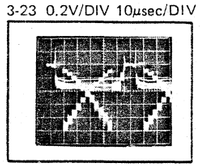

3-24 0.5V/DIV 10μsec/DIV

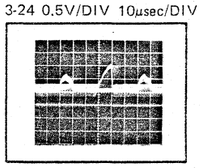

3-25 1V/DIV 10μsec/DIV

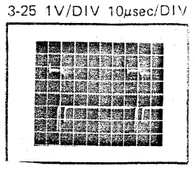

3-26 0.1V/DIV 10μsec/DIV

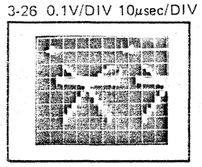

3-27 0.2V/DIV 10μsec/DIV

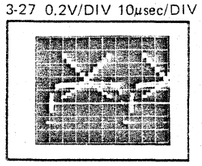

3-28 0.2V/DIV 10μsec/DIV

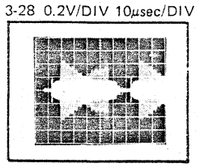

3-29 0.2V/DIV 10μsec/DIV

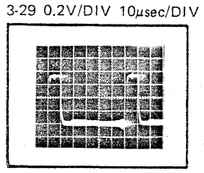

3-30 0.1V/DIV 2m sec/DIV

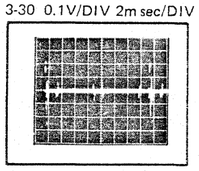

3-31 0.05V

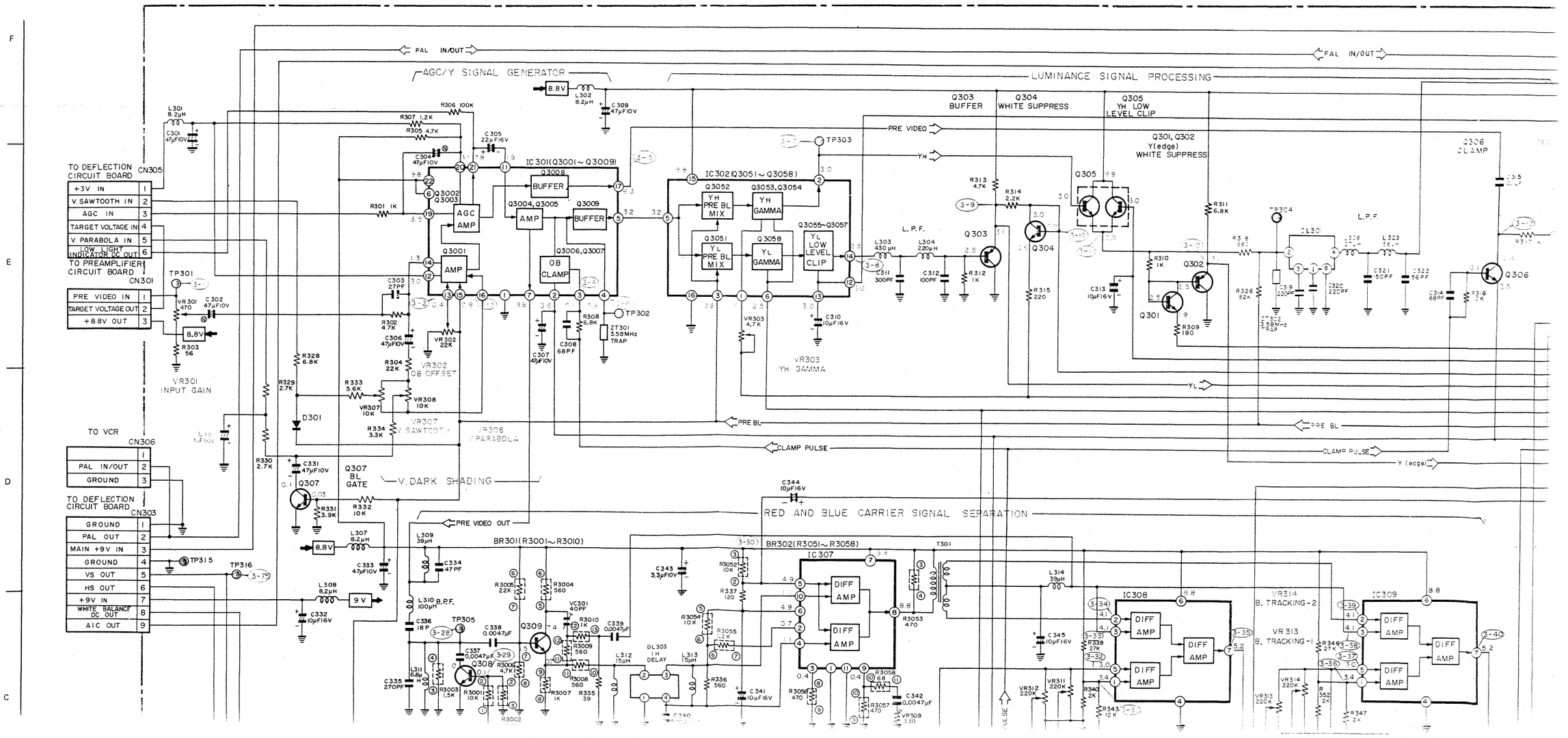

110

)F PROCESS CIRCUIT BOARD (YWV3201EZK03)

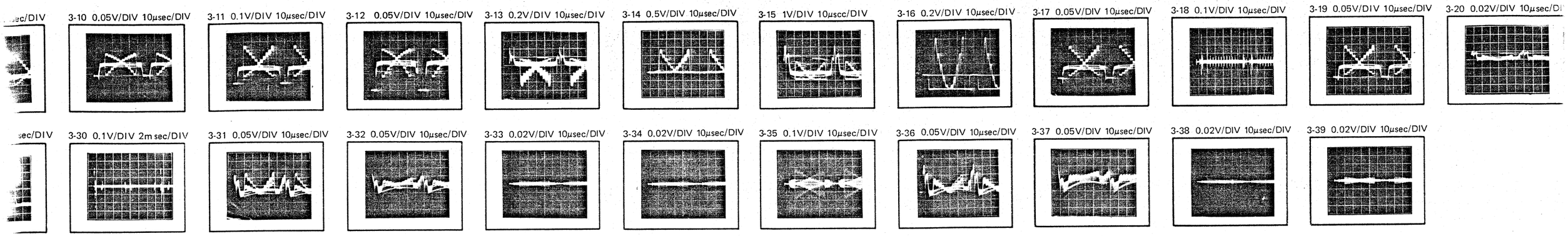

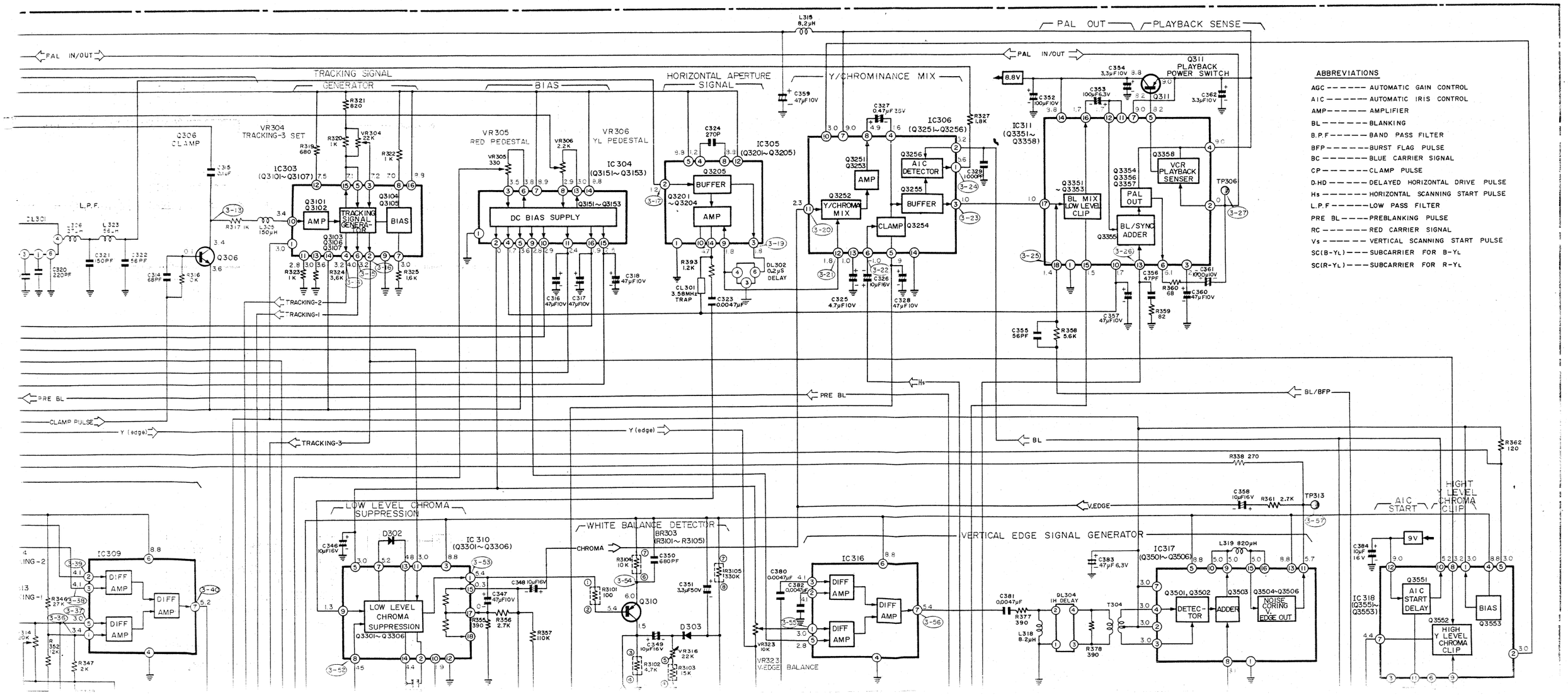

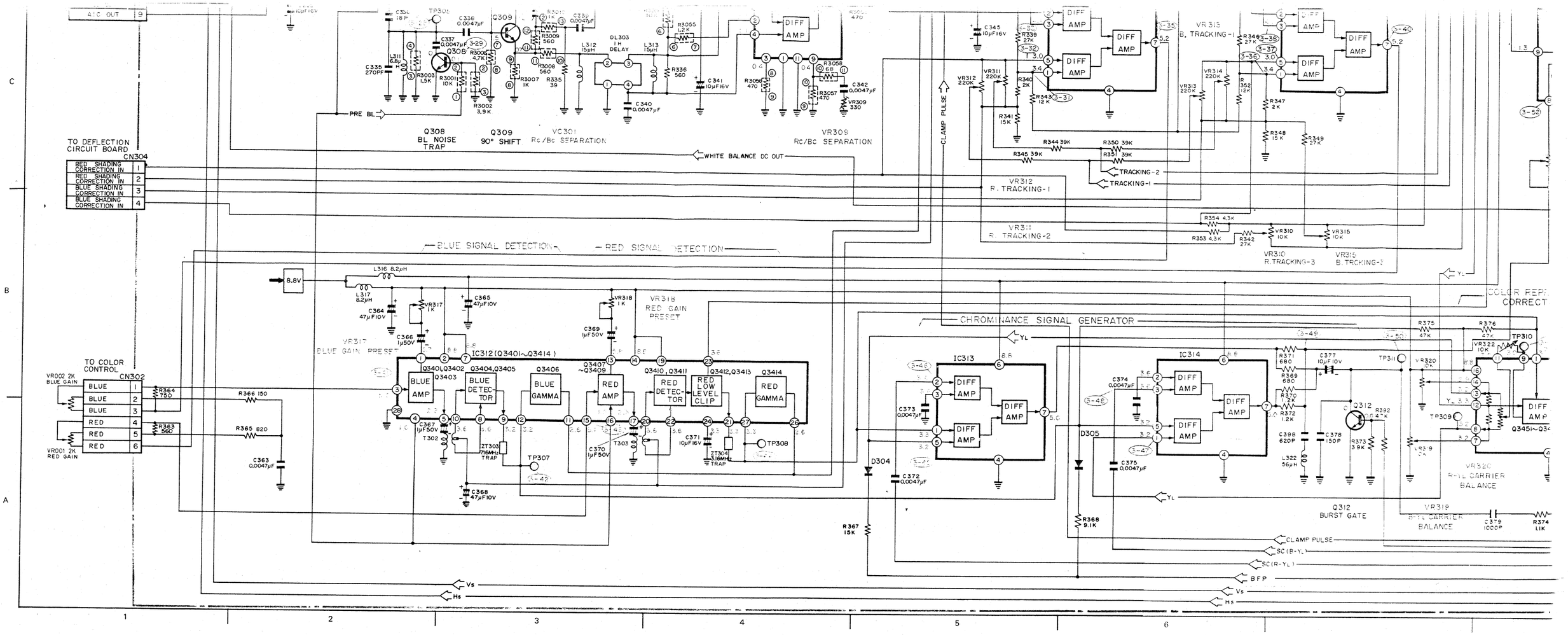

IC301	EHM-936W22	E3
IC302	EHM-321E90	E4
IC303	EHM-319E56	E8
IC304	EHM-322N17	E9
IC305	EHM-719U23	E10
IC306	EHM-K715U17	E10, 11

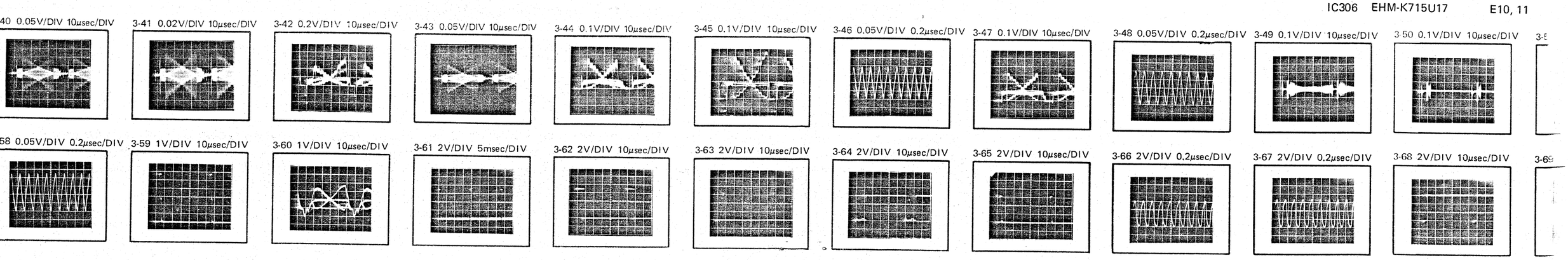

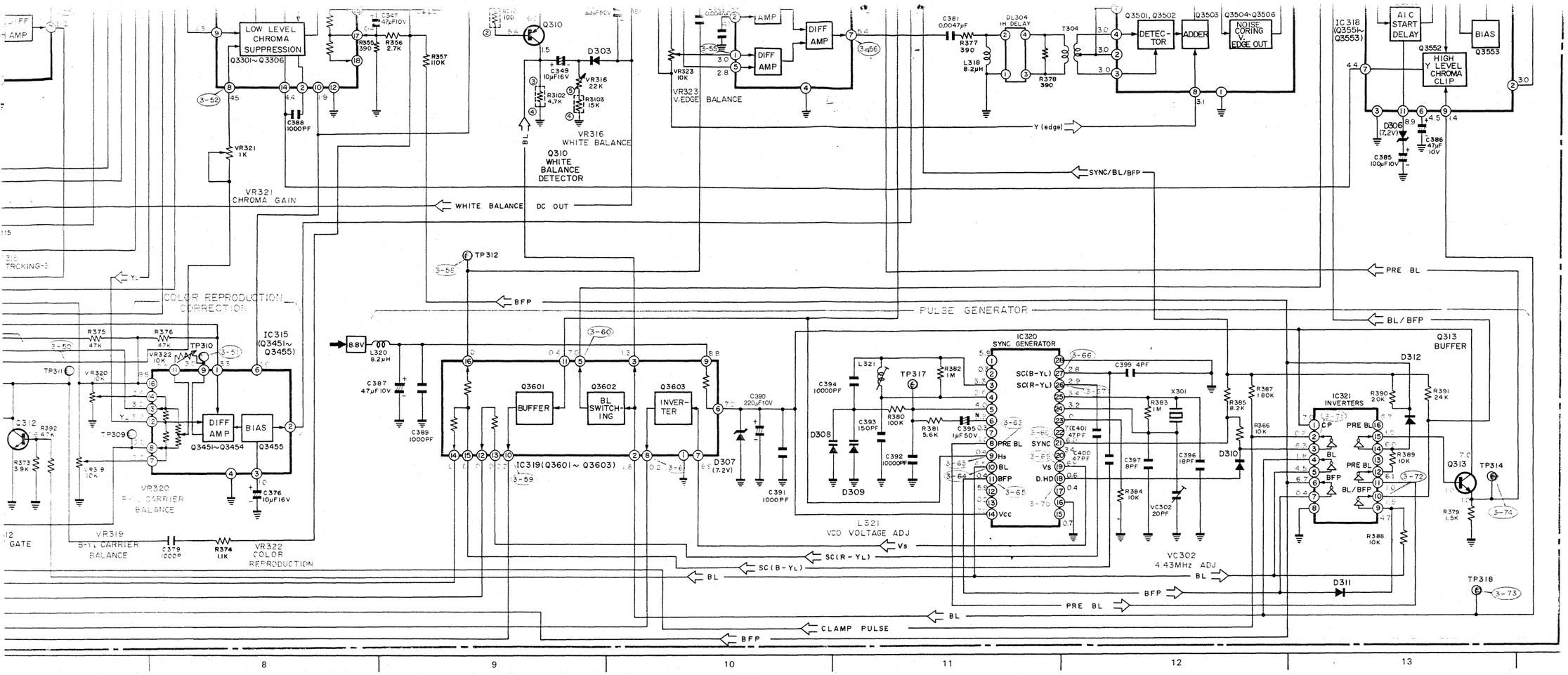

301	EHM-936W22	E3	IC307	AN610	C4	IC313	AN614	B5	IC319	EHM-K318R18	B9, 10	Q301	2SC1047-CD	E6	Q306	2SC1047-CD	E7
302	EHM-321E90	E4	IC308	AN614	C6	IC314	AN614	B6	IC320	YWHD44007A	A11, B11	Q302	2SA564-RS	E6	Q307	2SC1047-CD	D2
303	EHM-319E56	E8	IC309	AN614	C7	IC315	EHM-321E89	B8	IC321	YWMC14049UB	A13	Q303	2SA721-TU	E5	Q308	2SC1047-CD	C2
304	EHM-322N17	E9	IC310	EHM-817A73	C8	IC316	AN614	C10				Q304	2SC1047-CD	E5	Q309	2SC1047-CD	C3
305	EHM-719U23	E10	IC311	EHM-K825U24	E11, 12	IC317	EHM-318E88	C12				Q305	YUT2SC2259GH	E5	Q310	2SA564-QR	C9
306	EHM-K715U17	E10, 11	IC312	EHM-641S22	B3, 4	IC318	EHM-215R16	C13							Q311	2SA684-RS	F12
															Q312	2SC1047-CD	A7
															Q313	2SC1317-RS	A13
															D301	MA150	D2
															D302	OA90	D8
															D303	MA150	C9
															D304	MA150	A5
															D305	MA150	A6
															D306	YWEZ-072	C13
															D307	YWEZ-072	A10
															D308	YUD1S2688	A11
															D309	YUD1S2688	A11
															D310	MA150	A12
															D310	MA150	A12
															D311	MA150	A13
															D312	MA150	A13

sec/DIV

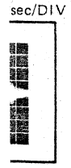

3-50 0.1V/DIV 10μsec/DIV

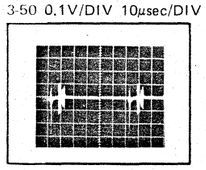

3-51 1V/DIV 10μsec/DIV

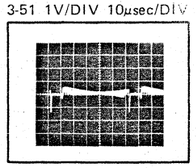

3-52 0.1V/DIV 10μsec/DIV

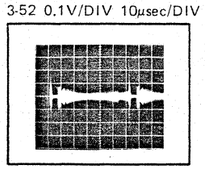

3-53 0.2V/DIV 10μsec/DIV

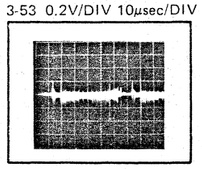

3-54 0.2V/DIV 10μsec/DIV

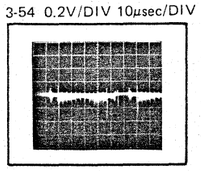

3-55 0.05V/DIV 10μsec/DIV

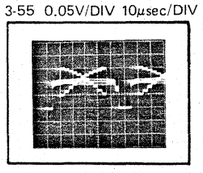

3-56 0.2V/DIV 10μsec/DIV

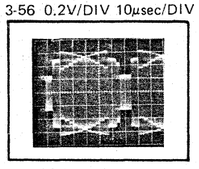

3-57 0.1V/DIV 2m sec/DIV

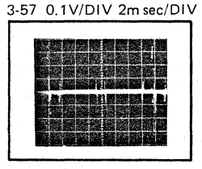

ec/DIV

3-68 2V/DIV 10μsec/DIV

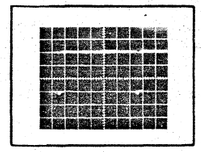

3-69 1V/DIV 5msec/DIV

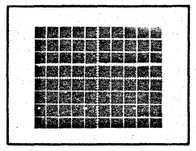

3-70 2V/DIV 10μsec/DIV

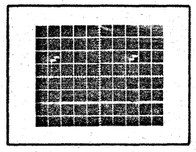

3-71 2V/DIV 10μsec/DIV

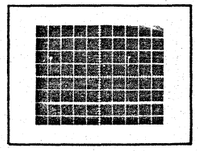

3-72 2V/DIV 10μsec/DIV

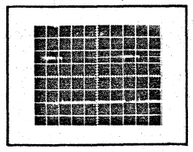

3-73 2V/DIV 10μsec/DIV

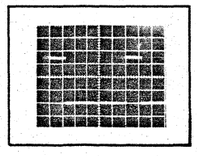

3-74 1V/DIV 10μsec/DIV

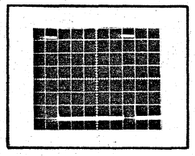

3-75 2V/DIV 5msec/DIV

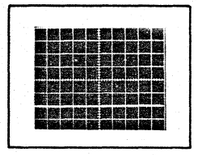

CONDUCTOR VIEW OF PROCESS CIR

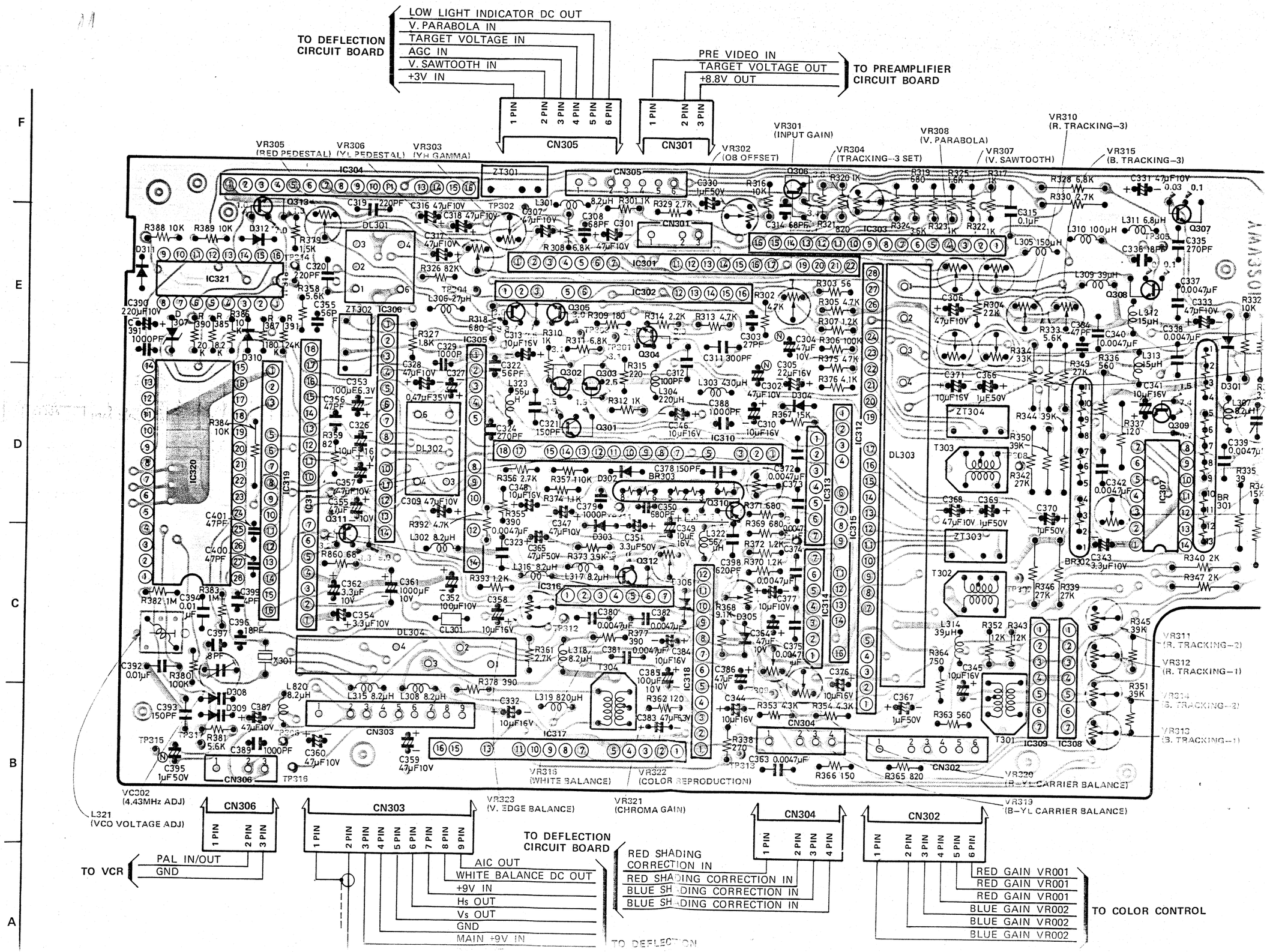

W OF PROCESS CIRCUIT BOARD (YWV3201EZK03)

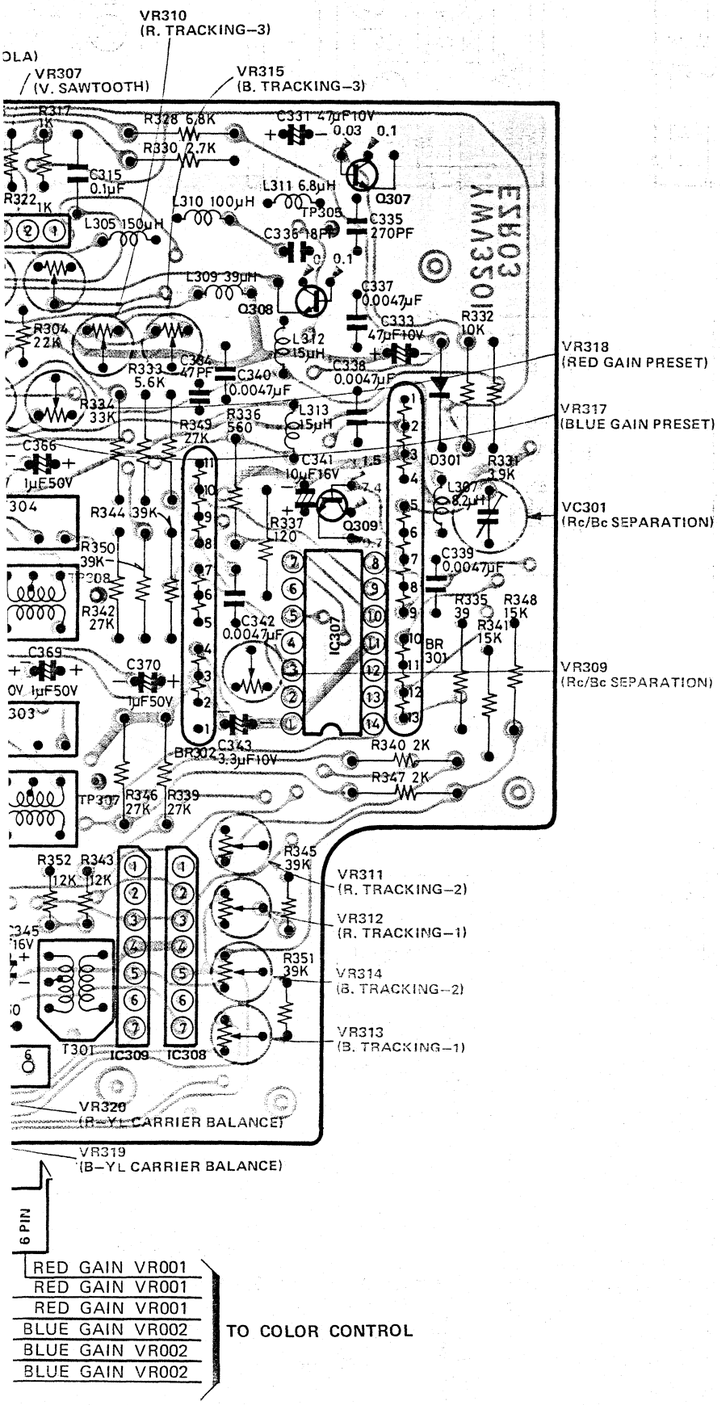

IC301	EHM-936W22	E4, 5
IC302	EHM-321E90	E4, 5
IC303	EHM-319E56	E5, 6
IC304	EHM-322N17	F2, 3
IC305	EHM-719U23	D3
IC306	EHM-K715U17	D3
IC307	AN610	D8
IC308	AN614	C7
IC309	AN614	C7
IC310	EHM-817A73	D4, 5
IC311	EHM-K825U24	C2, D2
IC312	EHM-641S22	C6, D6, E6
IC313	AN614	D5
IC314	AN614	C5
IC315	EHM-321E89	C6, D6
IC316	AN614	C4
IC317	EHM-318E88	B4
IC318	EHM-215R16	C5
IC319	EHM-K318R18	C2, D2
IC320	YWHD44007A	D1, D2
IC321	YWMC14049UB	E2
Q301	2SC1047-CD	D4
Q302	2SA564-RS	D4
Q303	2SA721-TU	D4
Q304	2SC1047-CD	E4
Q305	YUT2SC2259GH	E4
Q306	2SC1047-CD	F5
Q307	2SC1047-CD	F8
Q308	2SC1047-CD	E8
Q309	2SC1047-CD	D8
Q310	2SA564-QR	D5
Q311	2SA684-RS	C3
Q312	2SC1047-CD	C4
Q313	2SC1317-RS	E2
D301	MA150	E8
D302	OA90	D4
D303	MA150	C4
D304	MA150	D5
D305	MA150	C5
D306	YWEZ-072	C5
D307	YWEZ-072	E1
D308	YUD1S2688	B2
D309	YUD1S2688	B2
D310	MA150	E2
D311	MA150	E1
D312	MA150	E2

EHM-936W22

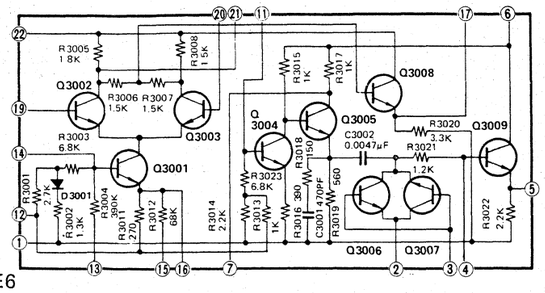

EHM-719U23

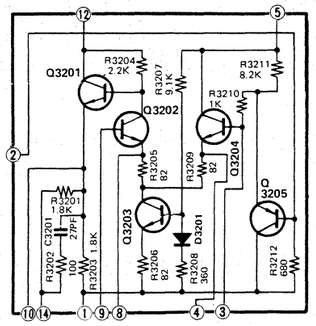

EHM-319E56

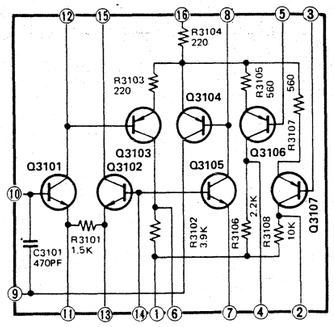

EHM-322N17

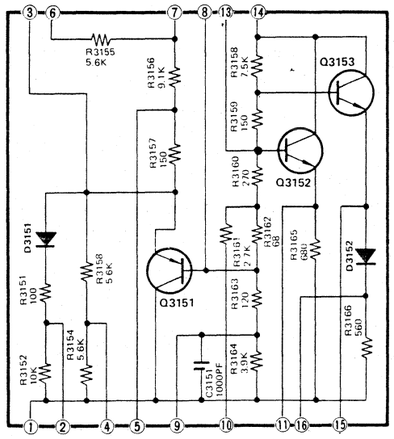

EHM-321E90

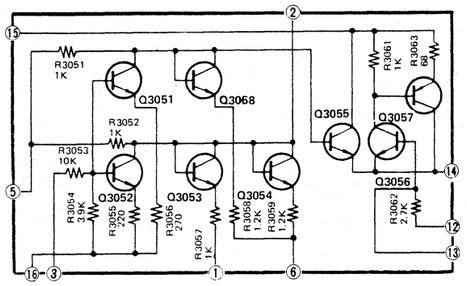

EHM-K715U17

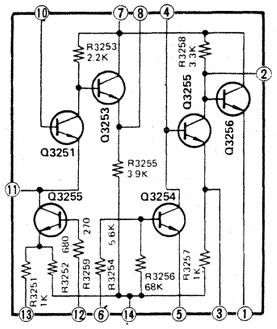

EHM-641S22

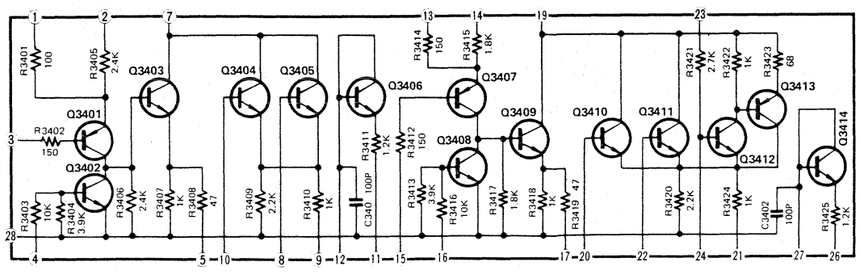

EHM-817A73

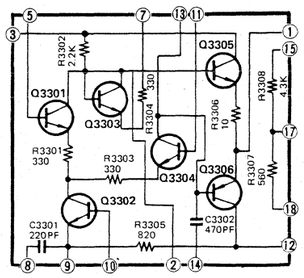

AN610

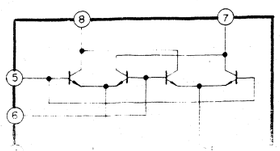

EHM-K825U24

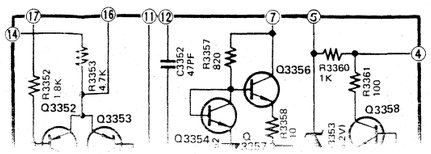

EHM-215R16

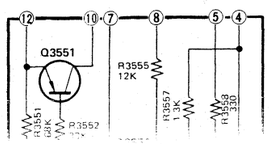

D308	YUD1S
D309	YUD1S
D310	MA150
D311	MA150
D312	MA150

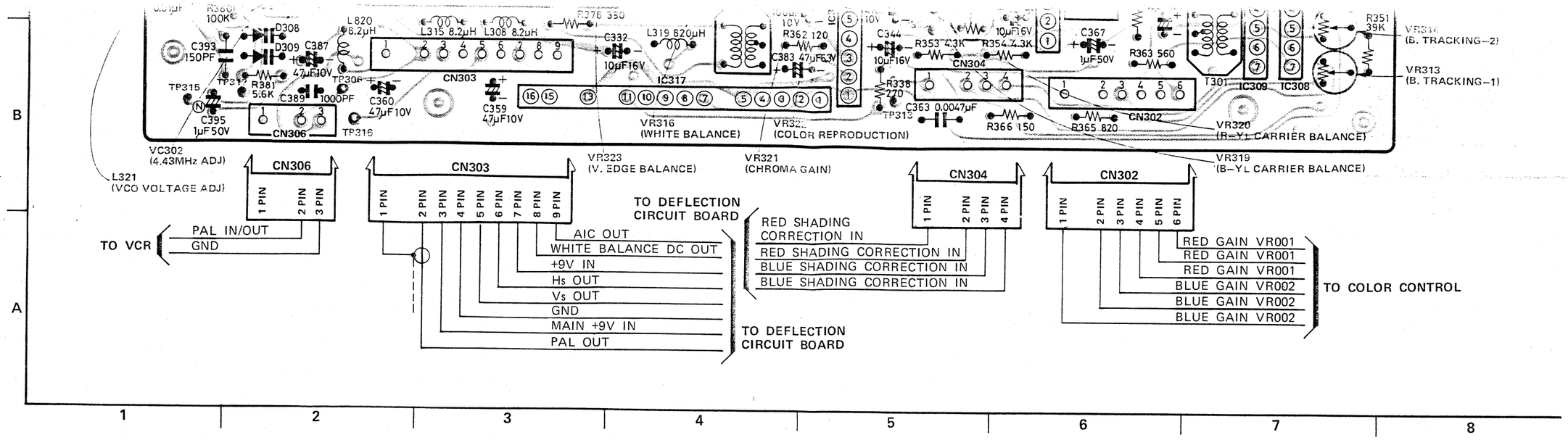

EHM-215R16

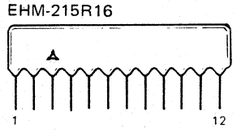

EHM-K715U17

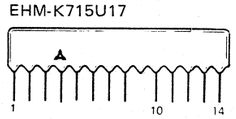

EHM-319E56

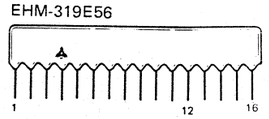

EHM-817A73

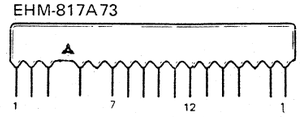

EHM-K318R18

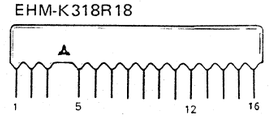

EHM-936W22

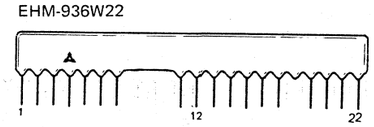

EHM-641S22

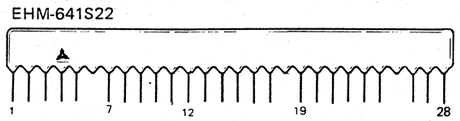

EHM-719U23

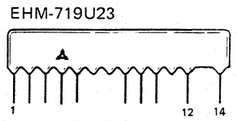

EHM-321E89

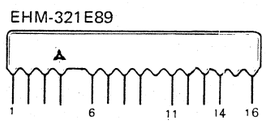

EHM-321E90

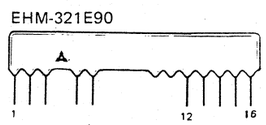

EHM-K825U24

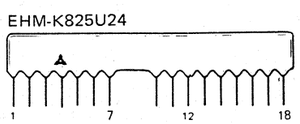

EHM-318E88

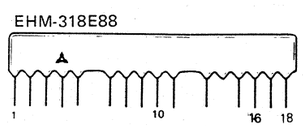

EHM-322N17

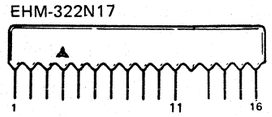

AN614

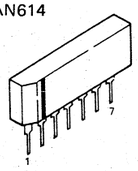

AN610

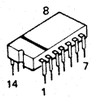

YWHD44007A

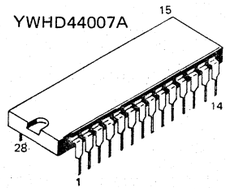

YWMC14049UB

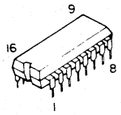

2SC828-QR, RS
2SC1317-RS
2SC1047-CD
2SA684-RS
2SA721-TU
2SA564-QR, RS

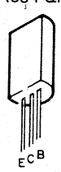

YUT2SC2259GH

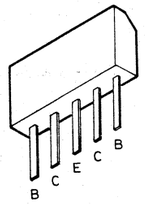

MA150

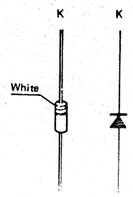

YWEZ-072

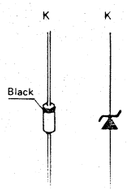

OA90

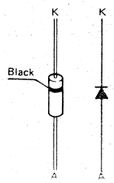

YUD1S2688

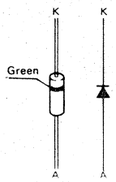

EXBH88084GB

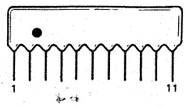

EXB-H85105JB

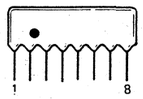

EXB-H810083J

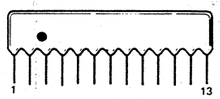

D309	YUD1S2688	B2
D310	MA150	E2
D311	MA150	E1
D312	MA150	E2

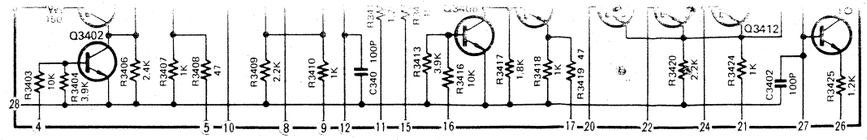

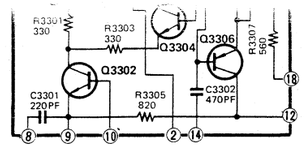

AN610

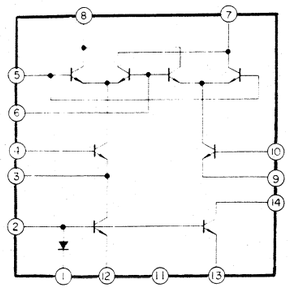

EHM-K825U24

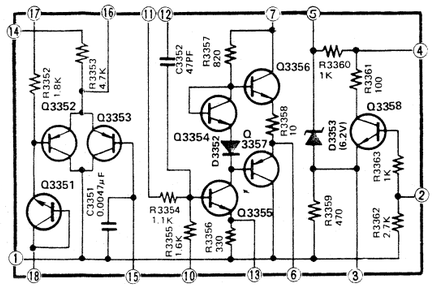

EHM-215R16

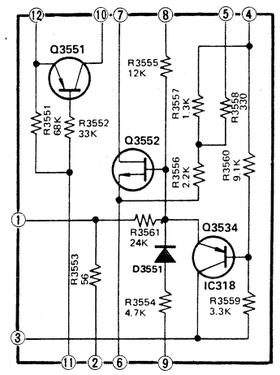

AN614

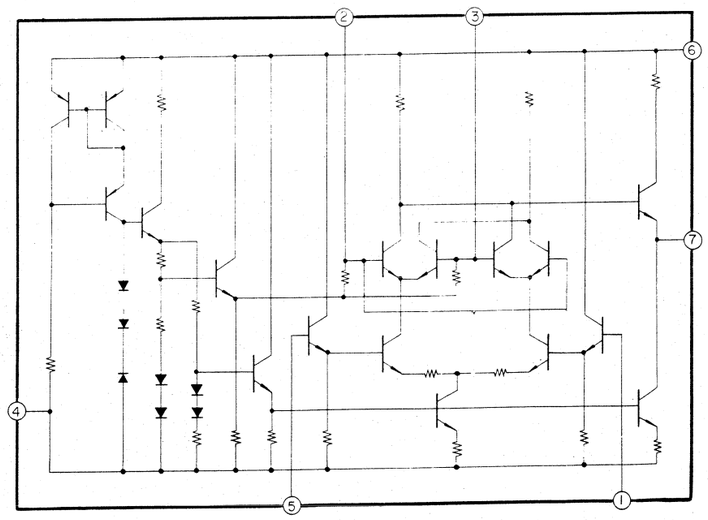

EHM-321E89

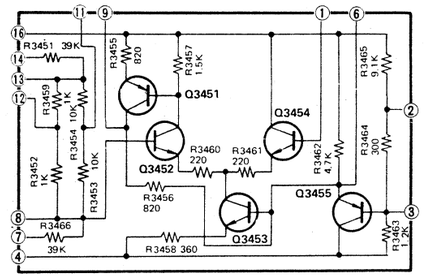

EHM-318E88

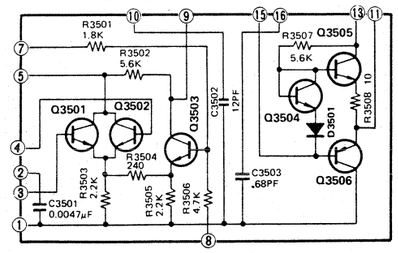

YWHD44007A

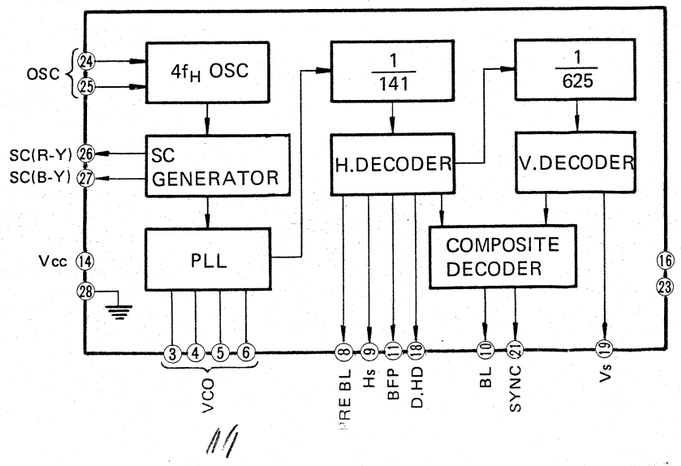

EHM-318R18

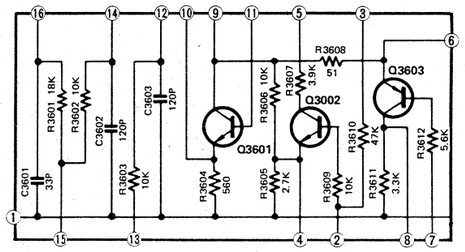

D309	YUD1S2688	B2
D310	MA150	E2
D311	MA150	E1
D312	MA150	E2

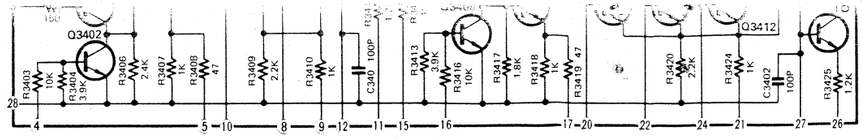

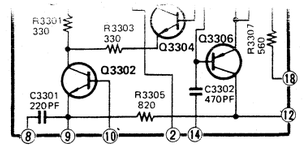

AN610

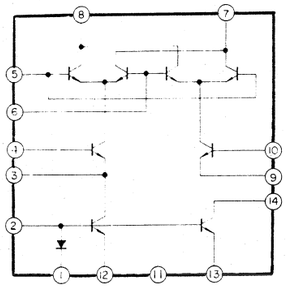

EHM-K825U24

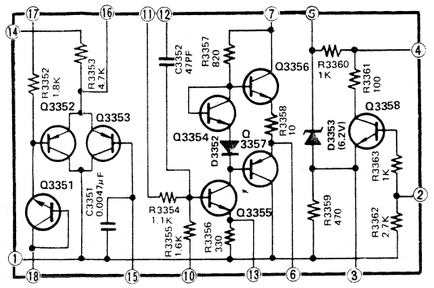

EHM-215R16

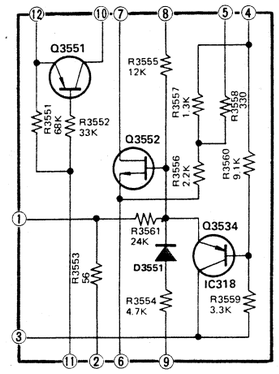

AN614

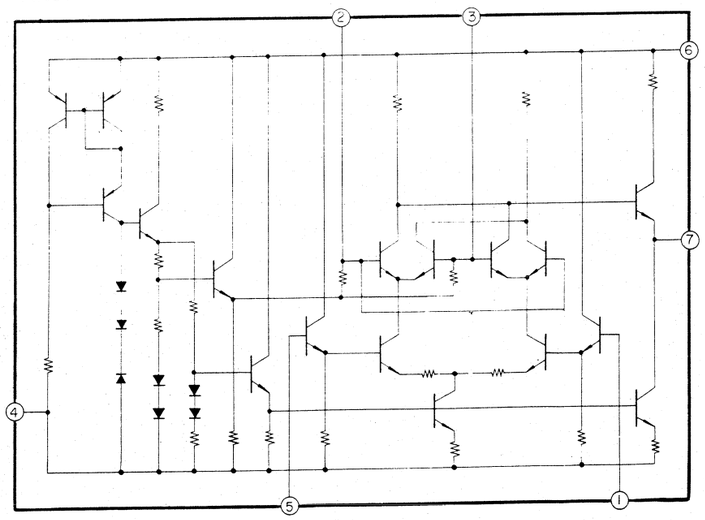

EHM-321E89

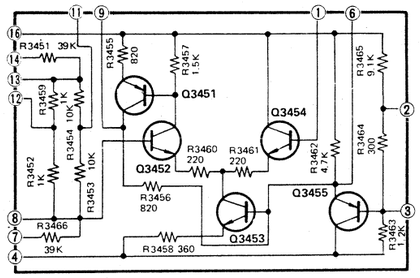

EHM-318E88

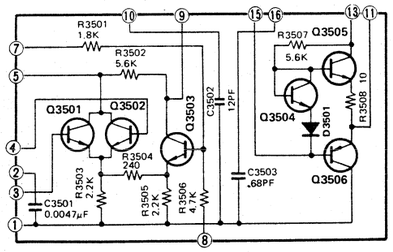

YWHD44007A

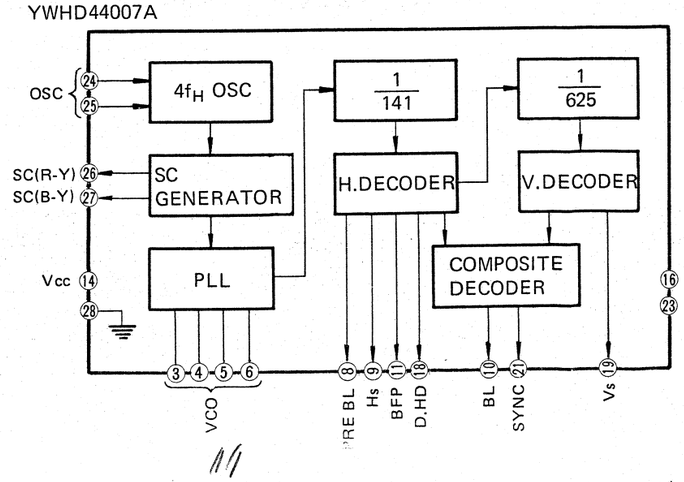

EHM-318R18

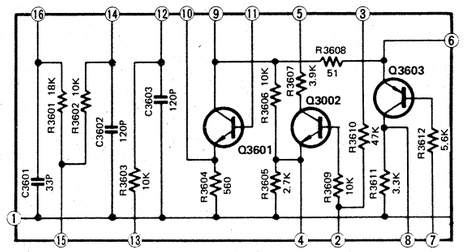

11

SCHEMATIC DIAGRAM AND CONDUCTOR VIEW OF PREAMPLIFIER CIRCUIT BOARD (YWV3201EZK01)

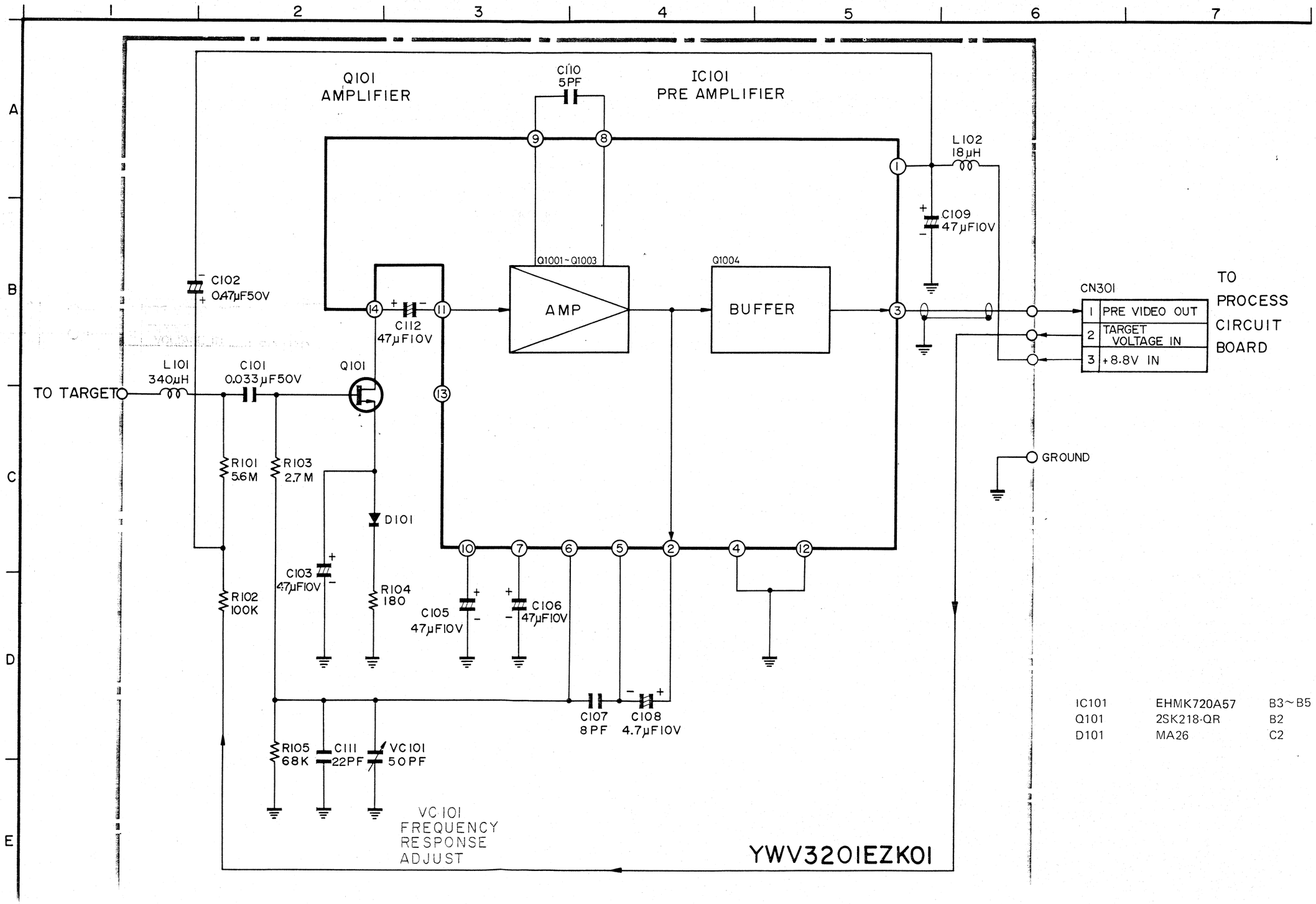

IC101	EHMK720A57	B3~B5
Q101	2SK218-QR	B2
D101	MA26	C2

SCHEMATIC DIAGRAM AND CONDUCTOR VIEW OF POWER SUPPLY (YWV3203EZK11, ZK12)

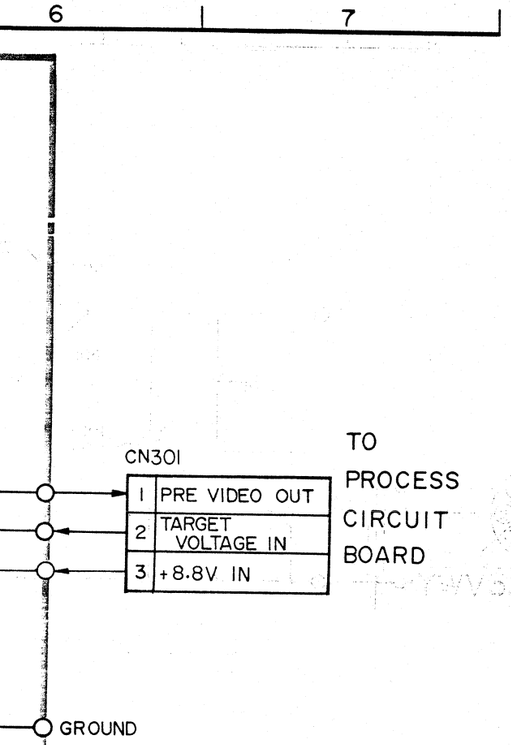

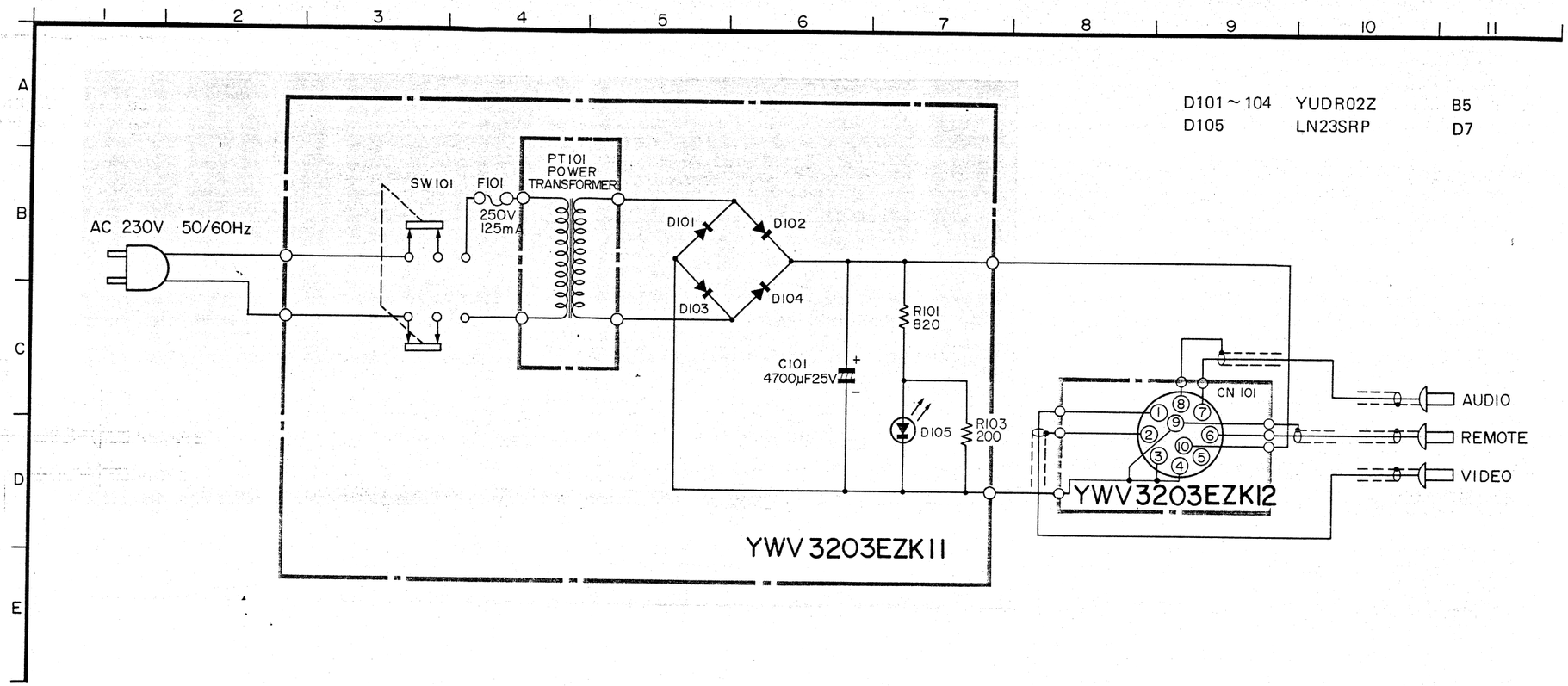

D101～104	YUDR02Z	B5
D105	LN23SRP	D7

IC101	EHMK720A57	B3～B5
Q101	2SK218-QR	B2
D101	MA26	C2

POWER SUPPLY CONNECTOR BOARD

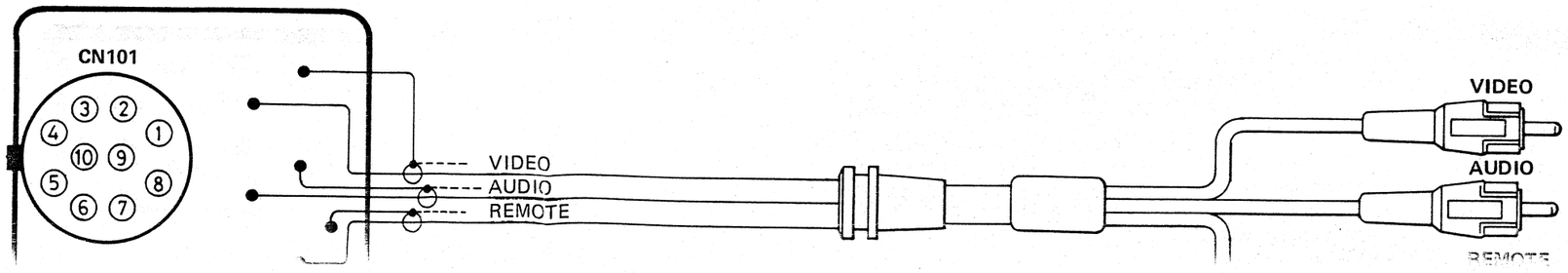

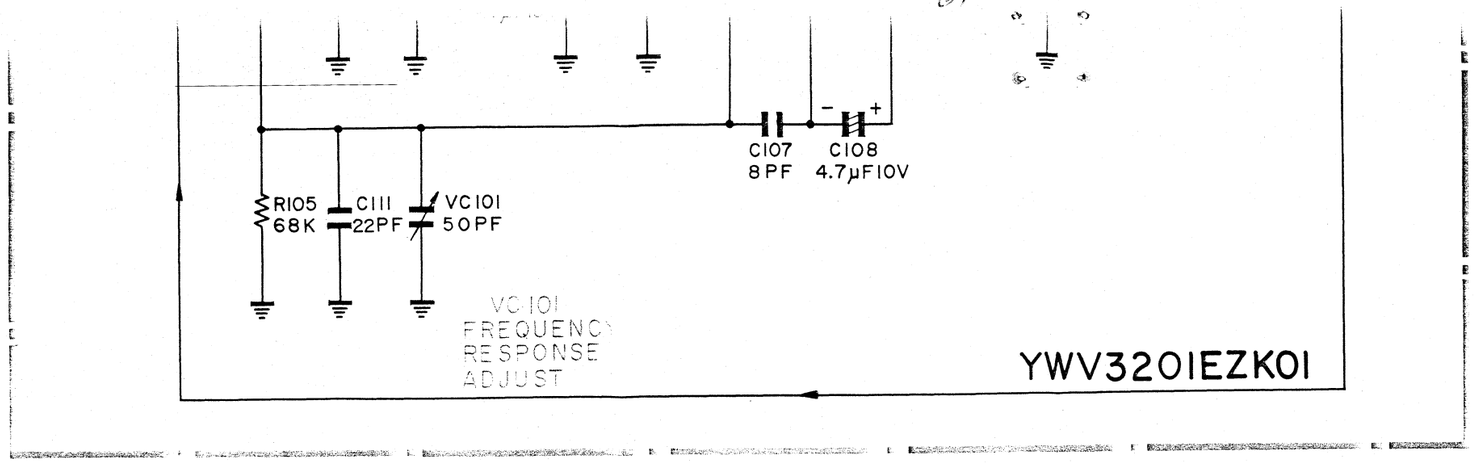

IC101	EHMK720A57	B3~B5
Q101	2SK218-QR	B2
D101	MA26	C2

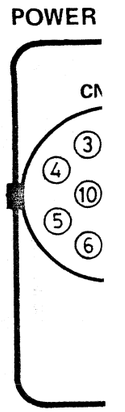

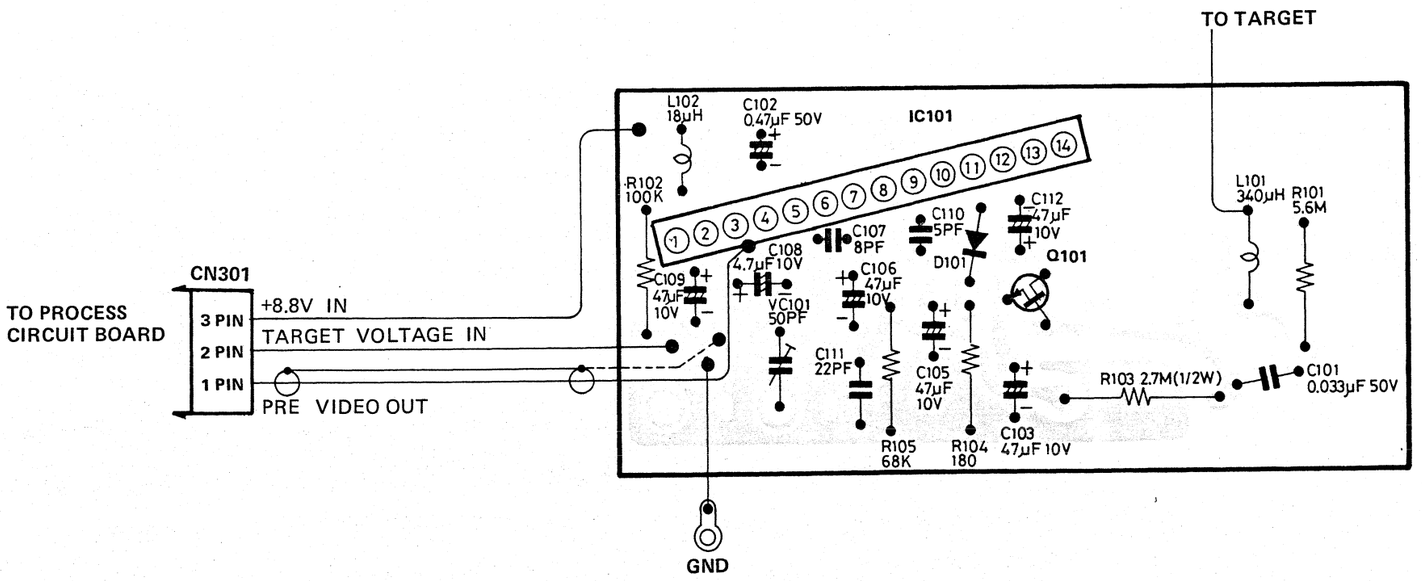

EHMK720A57

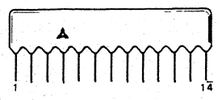

2SK218-QR

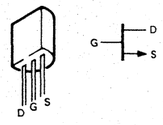

MA26

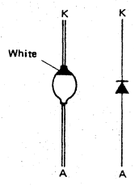

B3~B5
B2
C2

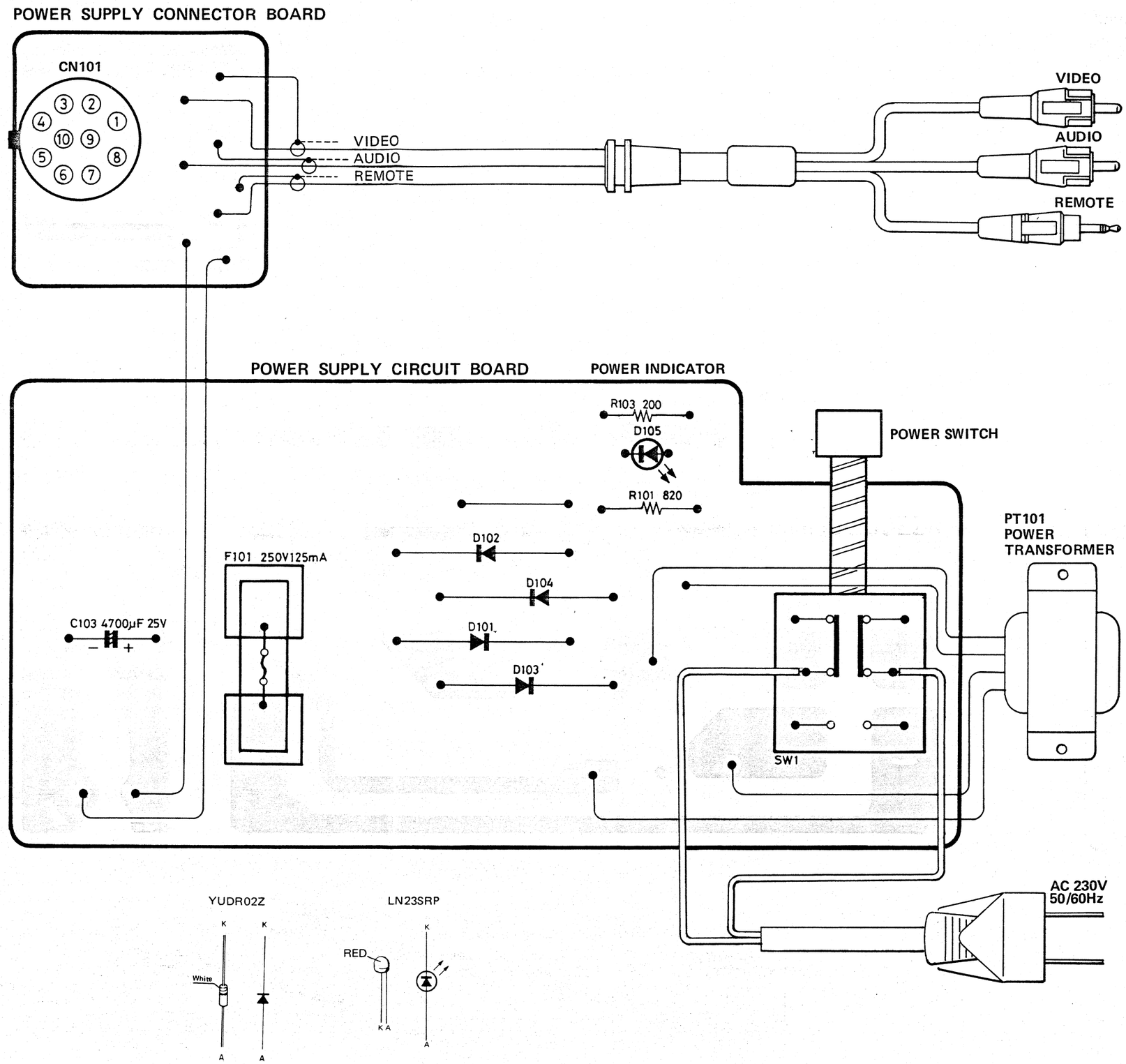
POWER SUPPLY CONNECTOR BOARD
CN101
VIDEO
AUDIO
REMOTE
POWER SUPPLY CIRCUIT BOARD
POWER INDICATOR
R103 200
D105
R101 820
POWER SWITCH
PT101
POWER
TRANSFORMER
D102
D104
D101
D103
F101 250V125mA
C103 4700μF 25V
SW1
AC 230V
50/60Hz
YUDR02Z
LN23SRP
RED
White
K
A

ORDER NO. AVD-8005-524

Service Manual

Vol. 4

Replacement Parts List
Exploded View

COLOR TV CAMERA

WV-3200N/WV-3200E

CONTENTS

PARTS LIST

CAMERA (WV-3200N/WV-3200E) 1

- Camera Miscellaneous/Chassis Mechanism (WV-3200N/WV-3200E) 1
- Optical Mechanism 1
- Preamplifier Circuit Board (YWV3201EZK01) 1
- Deflection Circuit Board (YWV3201EZK02) . . . . . 2~3
- Process Circuit Board (YWV3201EZK03) . . . . . 3~6
- L.E.D. Circuit Board (YWV4001ZK04) 6
- Zoom Circuit Board (YWV4001ZK06) 6
- Boom Circuit Board (YWV4001ZK07) 6
- Vidicon Socket Board (YWV4001ZK13) 6
- Adjustable Handle Grip (CC402) 6
- E.V.F. Mounting Assembly (VZ-C603A) 6
- E.V.F. Miscellaneous (WV-3204N/E) 6
- E.V.F. Circuit Board (YWV3206EZK08) . . . . . 6~7
- E.V.F. Indicator Circuit Board (YWV3206EZK09) . . . . . 7~8
- E.V.F. L.E.D. Board (YWV3206EZK10) 8
- Accessory Parts/Packaging Parts 8

POWER SUPPLY (WV-PS01N/PS01E) 8

- Power Supply Miscellaneous (WV-PS01N/PS01E) 8
- Power Supply Circuit Board (YWV3203ZK11) 8
- Connector Board (YWV3203ZK12) 8
- Accessory Parts/Packaging Parts 8

EXPLODED VIEW

- Camera (WV-3200N/WV-3200E) 9
- Optical Mechanism 10
- Adjustable Handle Grip/Handle Grip 10
- E.V.F. Mounting Assembly 11
- Power Supply (WV-PS01N/PS01E) 12
- Accessory Parts/Packaging Parts 13

National/Panasonic

Matsushita Electric Trading Co., Ltd.
P.O. Box 288, Central Osaka Japan

Vol. 4

REPLACEMENT PARTS LIST

Important Notice

1. Components identified by ⚠ mark have special characteristics important for safety. When replacing any of these components, use only manufacturer's specified parts.
2. Components identified by * mark are new parts used from this model.

MODEL WV-3200N/3200E

CAMERA WV-3200N/3200-E

MISCELLANEOUS

SYMBOL NO.	PART NO.	DESCRIPTION
V001	*S4094P	Vidicon Tube
Q001	2SA1061-P	Transistor
D001,002	YUDXZ-090	Diode
X001	YWXTALLPF23	Crystal Filter
X002	YW1R1X13R	Infrared Filter
L001	ELY-18A201B	Deflection Coil
R001	ERD25FJ222	Carbon 2.2KΩ ¼W
VR001,002	*YVN20E5352KB	Variable Resistor 2KΩ
SW002	*YWSSM023	BLC Switch
SW003	YWSSB042	Stand-By Switch
E001	YWCABLE4000	Camera Cable and Cable Connector
CN001	YW-SJ296	External Mic Jack
CN002-JF	YWMOJ-A5C	Remote Control Jack
CN201-PF	EMCHUR0601K	6-Pin Plug Femaie for ALC
CN202-PF	EMCB1024C55V	10-Pin Plug Female for Deflection Circuit Board
CN203-PF	EMCHUR0801K	8-Pin Plug Female for Zoom
CN204-PF	EMCHUR0601KB	6-Pin Plug Female for V.F.
CN205-PF	EMCHUR0601K	6-Pin Plug Female
CN206-PF	EMCB0614D53X	6-Pin Plug Female
CN302-PF	EMCHUR0601K	6-Pin Plug Female
CN306-PF	EMCHUR0301K	3-Pin Plug Female
CN802-JM	RP6-10R-8S	8-Pin Jack Male
M001	*YWV3200EKR2	Rear Cover
M002	*YWCC401KR08A	Top Inner Plate
M003	*YVZC601KR04	Cable Lock Plate
M004	*YVZC601HR01A	Knob (Red Indicator)
M005	*YVZC601HR02A	Knob (Blue Indicator)
M006	*YVZC601LM01B	Dust Blocking Washer
M008	*YVZC601KR99	Right Side Cover Assembly
M009	*YVZC601KR98	Left Side Cover Assembly
M010 *	YWV3200NDM1	LogoName Plate for WV-3200N
	YWV3210EDM1	LogoName Plate for WV-3210E
M012	*YWCC401UM01	Control Overlay
M014	*YVZC601CM01C	Rear Chassis
M015	*YVZC601FR01	Printed Circuit Board Hinge
M016	*YVZC601FR02	Insulator Washer for Ext Mic
M017	*YVZC601AM02A	Fastening Bracket for P.C.B.
M018	*YVZC601AM03A	Fastening Bracket for Top Inner Plate
M019	*YVZC601FM01A	Coil Guide
M020	*YVZC601WB02B	Crystal Holder
M021	*YVZC601FR03	Fastening Bracket for Crystal Holder
M022	*YVZC601KM01	Shield Case A for Preamplifier
M024	*YVZC601LM03A	Indicating Plate for Standby Switch
M026	*YVZC601FR04A	Deflection Coil Holder
M027	YWV550-WM01A	Hold Spring
M028	*YVZC601KR01	Front Cover
M029 *	YVZC601UM02A	Front Logo Overlay for WV-3200N
	YWV3200EUM2	Front Logo Overlay for WV-3200E
M030	*YVZC601AM04	Angle Plate for V.F. Connector
M032	*YVZC601KR07B	Mic Cover
M033	YWV550-DR01	Mic Cap
M034	YWV550-FB02A	Mic Cushion A
M035	*YVZC601WB01	Mic Cushion B
M036	*YVZC601LM02A	Ground Plate
M037	*YVZC601AM01	Reinforce Plate
M038	YWV550-WM03	Toothed Lock Washer
M039	YPM-KM276BA4	Wind Screen
M040 *	YWV3200NUR1	Instrument Label for WV-3200N
	YWV3200EUR1	Instrument Label for WV-3200E

OPTICAL MECHANISM

SYMBOL NO.	PART NO.	DESCRIPTION
SW004	YW618138	Power Zoom Control
M201	YW618146	Lens Cap
M202	YW618036	Lens Hood
M203	YW618201	Zoom Lens
M204	YW618137	Power Zoom Motor Assembly
M206	YW618139	Switch Board Assembly
M207	YW618140	Chassis Assembly
M208	YW618127	ALC Mechanism
M212	YW618152	Lens Mounting Fixing Ring
M213	YW618153	Lens Mount

YWV3201EZK01 PREAMPLIFIER CIRCUIT BOARD

SYMBOL NO.	PART NO.	DESCRIPTION
PCB001	*YWV3201EZK01	Printed Circuit Board Assembly
IC101	EHMK720A57	Integrated Circuit
Q101	2SK218-QR	Transistor
D101	MA26	Diode
R101	ERD25FJ565	Carbon 5.6MΩ ¼W
R102	ERD25FJ104	Carbon 100KΩ ¼W
R103	*ERO50CKG2704	Metal 2.7MΩ ½W
R104	ERD25FJ181	Carbon 180Ω ¼W
R105	ERD25FJ683	Carbon 68KΩ ¼W
C101	YCQMS05333K	Mylar 0.033μF 50V
C102	ECEA1HSR47	Electrolytic 0.47μF 50V
C103	ECSF10E47Z	Tantalum 47μF 10V
C105,106	ECSF10E47Z	Tantalum 47μF 10V
C107	ECCD1H080JC	Ceramic 8pF 50V
C108	ECSF10E4R7	Tantalum 4.7μF 10V
C109	ECSF10E47Z	Tantalum 47μF 10V
C110	ECCD1H050CC	Ceramic 5pF 50V
C111	ECCD1H220JC	Ceramic 22pF 50V
C112	ECSF10E47Z	Tantalum 47μF 10V
V0101	ECV1ZW50X44	Trimmer Capacitor 50pF
L101	YWPREL341	Inductor 340μH
L102	YWLS-7180J	Inductor 18μH
CN301-PF	EMCB0318B52X	3-Pin Plug Female for Process
M046	*YVZC601KM02	Shield Case A
M047	*YVZC601KM03	Shield Case B
M048	*YVZC601LR02	Insulator Paper

YWV3201EZK02
DEFLECTION CIRCUIT BOARD

SYMBOL NO.	PART NO.	DESCRIPTION		
PCB002	*YWV3201EZK02	Printed Circuit Board Assembly		
IC201	AN-6551	Integrated Circuit		
IC202	DN819	Integrated Circuit		
IC203	EHMK720A57	Integrated Circuit		
IC204,205	AN374P	Integrated Circuit		
Q201,202	2SC1327-TU	Transistor		
Q203	2SC828-QR	Transistor		
Q204	2SC1047-CD	Transistor		
Q205,206	2SC828-QR	Transistor		
Q207,208	2SC684-RS	Transistor		
Q209	2SC1384-RS	Transistor		
Q210	2SC1573-QR	Transistor		
Q211	2SA564A-QR	Transistor		
Q212	2SC1573-QR	Transistor		
Q213,214	2SA564A-QR	Transistor		
Q215	2SA721-TU	Transistor		
Q216	2SC828-RS	Transistor		
Q217	2SC828-QR	Transistor		
Q218	2SC1573-QR	Transistor		
Q219	2SC1317-QR	Transistor		
Q220	2SC1913A-QR	Transistor		
Q221~223	2SC828-RS	Transistor		
Q224	2SA721-TU	Transistor		
Q225	2SC828-RS	Transistor		
Q226	2SA564-RS	Transistor		
Q227	2SC828-QR	Transistor		
Q228	2SC1327-TU	Transistor		
Q229	2SC828-QR	Transistor		
D201~206	MA150	Diode		
D207	YUDYZ062E	Diode		
D208	MA26	Diode		
D209,210	MA150	Diode		
D211	YUDXZ-070	Diode		
D212,213	MA150	Diode		
U201	YWH1-PACK3A	High Voltage Pack		
R201	ERD25FJ621	Carbon	620Ω	¼W
R202	ERD25FJ562	Carbon	5.6KΩ	¼W
R203	ERD25FJ223	Carbon	22KΩ	¼W
R204	ERD25FJ562	Carbon	5.6KΩ	¼W
R205	ERD25FJ222	Carbon	2.2KΩ	¼W
R206	ERD25FJ103	Carbon	10KΩ	¼W
R207	ERO25CKF5100	Metal	510Ω	¼W
R208	ERD25FJ102	Carbon	1KΩ	¼W
R211	ERO25CKF1002	Metal	10KΩ	¼W
R212	ERO25CKF2002	Metal	20KΩ	¼W
R213,214	ERD25FJ102	Carbon	1KΩ	¼W
R215	ERD25FJ822	Carbon	8.2KΩ	¼W
R216,217	ERD25FJ104	Carbon	100KΩ	¼W
R218	ERD25FJ105	Carbon	1MΩ	¼W
R219	ERD25FJ334	Carbon	330KΩ	¼W
R220	ERD25FJ392	Carbon	3.9KΩ	¼W
R221	ERD25FJ302	Carbon	3KΩ	¼W
R222	ERD25FJ513	Carbon	51KΩ	¼W
R223	ERD25FJ333	Carbon	33KΩ	¼W
R224	ERD25FJ103	Carbon	10KΩ	¼W
R225	ERD25FJ220	Carbon	22Ω	¼W
R226	ERD25FJ393	Carbon	39KΩ	¼W
R228	ERD25FJ363	Carbon	36KΩ	¼W
R229	ERD18TJ472	Carbon	4.7KΩ	
R230	ERD25FJ393	Carbon	39KΩ	¼W
R231	ERD25FJ332	Carbon	3.3KΩ	¼W
R232	ERD25FJ822	Carbon	8.2KΩ	¼W
R233	ERD25FJ562	Carbon	5.6KΩ	¼W
R234	ERO25CKF1800	Metal	180Ω	¼W
R235	ERSB40J202	Thermal	2KΩ	
R236	ERD25FJ274	Carbon	270KΩ	¼W
R237	ERD25FJ103	Carbon	10KΩ	¼W
R238	ERD25FJ224	Carbon	220KΩ	¼W
R239	ERD25FJ822	Carbon	8.2KΩ	¼W
R240	ERO25CKF33R0	Metal	33Ω	¼W
R241	ERD25FJ681	Carbon	680Ω	¼W
R242	ERD25FJ154	Carbon	150KΩ	¼W
R243	ERD25FJ362	Carbon	3.6KΩ	¼W
R244	ERD18TJ103	Carbon	10KΩ	
R245	ERD25FJ150	Carbon	15Ω	¼W
R246	ERD25FJ100	Carbon	10Ω	¼W
R247	ERD25FJ821	Carbon	820Ω	¼W
R250	ERD25FJ753	Carbon	75KΩ	¼W
R251	ERD25FJ124	Carbon	120KΩ	¼W
R252	ERD25FJ823	Carbon	82KΩ	¼W
R253	ERD25FJ101	Carbon	100Ω	¼W
R254	ERD25FJ151	Carbon	150Ω	¼W
R255	ERD25FJ101	Carbon	100Ω	¼W
R256	ERD25FJ223	Carbon	22KΩ	¼W
BR201	EXBH88076JB	Block Resistor		
BR202	EXBH88077JB	Block Resistor		
BR203	EXBH87088JB	Block Resistor		
BR204	EXBH810078JB	Block Resistor		
BR205 ⚠	EXBH87080JB	Block Resistor		
BR206	EXBH89081GB	Block Resistor		
BR207	EXBH89082JB	Block Resistor		
BR208	EXBH84068J	Block Resistor		
J202~209	ERD18TO	Jumper Resistor		
VR201	WHS222A100B	Variable Resistor	100Ω	
VR202	EVNK2AA00B25	Variable Resistor	200KΩ	
VR203	EVMG1GA01B16	Variable Resistor	1MΩ	
VR212,213	YWH0651A4R7K	Variable Resistor	4.7KΩ	
VR219 ⚠	YWHS512A1K	Variable Resistor	1KΩ	
VR220	EVNK2AA00B23	Variable Resistor	2KΩ	
VR221	YWHS512A470K	Variable Resistor	470KΩ	
VR222	WHS222A100B	Variable Resistor	100Ω	
VR223	EVNK2AA00B14	Variable Resistor	10KΩ	
VR224	YWHS512A22K	Variable Resistor	22KΩ	
VR225	EVNK2AA00B15	Variable Resistor	100KΩ	
VR226	EVNK2AA00B23	Variable Resistor	2KΩ	
VRB201, 202	EVMD0GA00099	Block Variable		
VRB203	EVMD0GA00098	Block Variable		

SYMBOL NO.	PART NO.	DESCRIPTION		
C201	ECEA1CS220	Electrolytic	22μF	16V
C202	ECEA1HS2R2	Electrolytic	2.2μF	50V
C203	ECEA1AS101	Electrolytic	100μF	10V
C204	ECEA0JS330S	Electrolytic	33μF	6.3V
C205	ECQM1H472KZ	Polyester	0.0047μF	50V
C206	ECEA50N1	Electrolytic	1μF	50V
C207	ECEA1AS221	Electrolytic	220μF	10V
C208	ECEA1ES470	Electrolytic	47μF	25V
C209,210	ECEA1HSR47	Electrolytic	0.47μF	50V
C211	ECEA1AS330	Electrolytic	33μF	10V
C212	ECEA1HSR47	Electrolytic	0.47μF	50V
C213	ECEA50N1	Electrolytic	1μF	50V
C214	ECEA1AS221	Electrolytic	220μF	10V
C215,216	ECEA1CS100	Electrolytic	10μF	16V
C217	ECEA2AS010	Electrolytic	1μF	100V
C218	ECKD3D182KB	Ceramic	1800pF	3KV
C219	ECQE4103KZ	Polyester	0.01μF	400V
C220	ECQE10103K	Polyester	0.01μF	1000V
C222	ECQE4473KZ	Polyester	0.047μF	400V
C223	ECSF16E6R8K	Tantalum	6.8μF	16V
C224	ECEA1CS100	Electrolytic	10μF	16V
C225	ECSF16E2R2K	Tantalum	2.2μF	16V
C226	ECEA1CS100	Electrolytic	10μF	16V
C227~230	ECEA1CK100	Electrolytic	10μF	16V
C231	ECEA1CS100S	Electrolytic	10μF	16V
C232	ECEA1ES100	Electrolytic	10μF	25V
C233	ECEA1AS470	Electrolytic	47μF	10V
C234	ECQM1H223KZ	Polyester	0.022μF	50V
C235	ECEA1ES100	Electrolytic	10μF	25V
C236,237	ECEA1HS100	Electrolytic	10μF	50V
C238	ECEA1AS221	Electrolytic	220μF	10V
C239	ECKD1H121KZ	Ceramic	120pF	50V
C240	ECEA2AS010	Electrolytic	1μF	100V
C241	ECEA1AS101	Electrolytic	100μF	10V
C242	ECQM1H473KZ	Polyester	0.047μF	50V
C243	ECSF10E10	Tantalum	10μF	10V
C244	ECSF10E68	Tantalum	68μF	10V
C245	ECEA1ES4R7	Electrolytic	4.7μF	25V
C246	ECQP1181JZ	Polypropylene	180pF	100V
C247	ECQM1H222KZ	Polyester	0.0022μF	50V
C248	ECQM1H104KZ	Polyester	0.1μF	50V
C249	ECQP1391JZ	Polypropylene	390pF	100V
C250,251	ECEA1CS100	Electrolytic	10μF	16V
C252	ECEA1CS220	Electrolytic	22μF	16V
C253	ECQM1224JG	Polyester	0.22μF	100V
C254	ECQM1H222KZ	Polyester	0.0022μF	50V
C255,256	ECEA1AS470	Electrolytic	47μF	10V
C257	ECSF35ER22	Tantalum	0.22μF	35V
C258	ECEA0JS470	Electrolytic	47μF	6.3V
C259	ECEA1HS010	Electrolytic	1μF	50V
C260	ECSF35ER22	Tantalum	0.22μF	35V
C261	ECEA1AS470	Electrolytic	47μF	10V
C262	ECKD1H101KB	Ceramic	100pF	50V
C263	ECEA1HS010	Electrolytic	1μF	50V
C265	ECEA1CS220	Electrolytic	22μF	16V
C269	ECCF1H390K	Ceramic	39μF	50V

SYMBOL NO.	PART NO.	DESCRIPTION	
L201	ELQ391D028	Inductor	390μH
L202	ELQ333D008J	Inductor	33mH
L203	YWL10103J	Inductor	10mH
L204	ELQ-082C10A	Inductor	8.2μH
F201 ⚠	ERQ12HKR22	Fuse Resistor	
E201	YW17255-1	Pin for Iris Setting	
E202	YWJ207	Pin Connector for Iris Setting	
CN201-JM	EMCS0650	6-Pin Jack Male	
CN202-JM	EMCS1050	10-Pin Jack Male	
CN203-JM	EMCS0850	8-Pin Jack Male	
CN204-JM ~206-JM	EMCS0650	6-Pin Jack Male	
CN303-PF	EMCB0917D54Y	9-Pin Plug Female	
CN304-PF	EMCB0413D52Y	4-Pin Plug Female	
CN305-PF	EMCB0628D52Y	6-Pin Plug Female	
CN701-PF	EMCHUR0301K	3-Pin Plug Female for Mic	
M051	YVZC601KM06A	Shield Case C	
M052	YVZC601LR04A	Insulator Paper	

YWV3201EZK03 PROCESS CIRCUIT BOARD

PCB003	*YWV3201EZK03	Printed Circuit Board Assembly
IC301	EHM-936W22	Integrated Circuit
IC302	*EHM-321E90	Integrated Circuit
IC303	EHM-319E56	Integrated Circuit
IC304	EHM-322N17	Integrated Circuit
IC305	*EHM-719U23	Integrated Circuit
IC306	EHM-715U17	Integrated Circuit
IC307	AN610	Integrated Circuit
IC308,309	AN614	Integrated Circuit
IC310	*EHM-817A73	Integrated Circuit
IC311	*EHM-K825U24	Integrated Circuit
IC312	*EHM-641S22	Integrated Circuit
IC313,314	AN614	Integrated Circuit
IC315	*EHM-321E89	Integrated Circuit
IC316	AN614	Integrated Circuit
IC317	*EHM-318E88	Integrated Circuit
IC318	EHM-215R16	Integrated Circuit
IC319	*EHM-K318R18	Integrated Circuit
IC320	*YWHD44007A	Integrated Circuit
IC321	*YWMC14049UB	Integrated Circuit
Q301	2SC1047-CD	Transistor
Q302	2SA564-RS	Transistor
Q303	2SA721-TU	Transistor
Q304	2SC1047-CD	Transistor
Q305	YUT2SC2259GH	Transistor
Q306~309	2SC1047-CD	Transistor
Q310	2SA564-QR	Transistor
Q311	2SA684-RS	Transistor
Q312	2SC1047-CD	Transistor
Q313	2SC1317-RS	Transistor
D301	MA150	Diode
D302	0A90	Diode
D303~305	MA150	Diode
D306,307	YWEZ-072	Diode
D308,309	*YUD1S2688	Diode

SYM-BOL NO.	PART NO.	DESCRIPTION		
D310~312	MA150	Diode		
X301	*YWNC18C17R7M	Crystal		
R301	ERD25FJ102	Carbon	1KΩ	¼W
R302	ERD25FJ472	Carbon	4.7KΩ	¼W
R303	ERD25FJ560	Carbon	56Ω	¼W
R304	ERD25FJ223	Carbon	22KΩ	¼W
R305	ERO25CKF4701	Metal	4.7KΩ	¼W
R306	ERD25FJ104	Carbon	100KΩ	¼W
R307	ERO25CKF1201	Metal	1.2KΩ	¼W
R308	ERD25FJ682	Carbon	6.8KΩ	¼W
R309	ERD25FJ181	Carbon	180Ω	¼W
R310	ERD25FJ102	Carbon	1KΩ	¼W
R311	ERD25FJ682	Carbon	6.8KΩ	¼W
R312	ERD25FJ102	Carbon	1KΩ	¼W
R313	ERD25FJ472	Carbon	4.7KΩ	¼W
R314	ERD25FJ222	Carbon	2.2KΩ	¼W
R315	ERD25FJ221	Carbon	220Ω	¼W
R316	ERD25FJ103	Carbon	10KΩ	¼W
R317	ERD25FJ102	Carbon	1KΩ	¼W
R318	ERD25FJ681	Carbon	680Ω	¼W
R319	ERO25CKF6800	Metal	680Ω	¼W
R320	ERO25CKF1001	Metal	1KΩ	¼W
R321	ERO25CKF8200	Metal	820Ω	¼W
R322,323	ERO25CKF1001	Metal	1KΩ	¼W
R324	ERO25CKF3601	Metal	3.6KΩ	¼W
R325	ERO25CKF1601	Metal	1.6KΩ	¼W
R326	ERD25FJ823	Carbon	82KΩ	¼W
R327	ERD25FJ182	Carbon	1.8KΩ	¼W
R328	ERD25FJ682	Carbon	6.8KΩ	¼W
R329,330	ERD25FJ272	Carbon	2.7KΩ	¼W
R331	ERD25FJ392	Carbon	3.9KΩ	¼W
R332	ERD25FJ103	Carbon	10KΩ	¼W
R333	ERD25FJ562	Carbon	5.6KΩ	¼W
R334	ERD25FJ332	Carbon	3.3KΩ	¼W
R335	ERD25FJ390	Carbon	39Ω	¼W
R336	ERD25FJ561	Carbon	560Ω	¼W
R337	ERSB20J121	Thermal	120Ω	¼W
R338	ERD25FJ271	Carbon	270Ω	¼W
R339	ERO25CKF2702	Metal	27KΩ	¼W
R340	ERD25FJ202	Carbon	2KΩ	¼W
R341	ERO25CKF1502	Metal	15KΩ	¼W
R342	ERD25FJ273	Carbon	27KΩ	¼W
R343	ERD25FJ123	Carbon	12KΩ	¼W
R344,345	ERD25FJ393	Carbon	39KΩ	¼W
R346	ERO25CKF2702	Metal	27KΩ	¼W
R347	ERD25FJ202	Carbon	2KΩ	¼W
R348	ERO25CKF1502	Metal	15KΩ	¼W
R349	ERD25FJ273	Carbon	27KΩ	¼W
R350,351	ERD25FJ393	Carbon	39KΩ	¼W
R352	ERD25FJ123	Carbon	12KΩ	¼W
R353,354	ERD25FJ432	Carbon	4.3KΩ	¼W
R355	ERD25FJ391	Carbon	390Ω	¼W
R356	ERD25FJ272	Carbon	2.7KΩ	¼W
R357	ERD25FJ114	Carbon	110KΩ	¼W
R358	ERD25FJ562	Carbon	5.6KΩ	¼W

SYM-BOL NO.	PART NO.	DESCRIPTION		
R359	ERD25FJ820	Carbon	82Ω	¼W
R360	ERD25FJ680	Carbon	68Ω	¼W
R361	ERD25FJ272	Carbon	2.7KΩ	¼W
R362	ERD25FJ121	Carbon	120Ω	¼W
R363	ERD25FJ561	Carbon	560Ω	¼W
R364	ERD25FJ751	Carbon	750Ω	¼W
R365	ERD25FJ821	Carbon	820Ω	¼W
R366	ERD25FJ151	Carbon	150Ω	¼W
R367	ERD25FJ153	Carbon	15KΩ	¼W
R368	ERD25FJ912	Carbon	9.1KΩ	¼W
R369	ERD25FJ681	Carbon	680Ω	¼W
R370	ERD25FJ122	Carbon	1.2KΩ	¼W
R371	ERD25FJ681	Carbon	680Ω	¼W
R372	ERD25FJ122	Carbon	1.2KΩ	¼W
R373	ERD25FJ392	Carbon	3.9KΩ	¼W
R374	ERD25FJ112	Carbon	1.1KΩ	¼W
R375,376	ERD25FJ473	Carbon	47KΩ	¼W
R377,378	ERD25FJ391	Carbon	390Ω	¼W
R379	ERD25FJ152	Carbon	1.5KΩ	¼W
R380	ERD25FJ104	Carbon	100KΩ	¼W
R381	ERD25FJ562	Carbon	5.6KΩ	¼W
R382,383	ERD25FJ105	Carbon	1MΩ	¼W
R384	ERD25FJ103	Carbon	10KΩ	¼W
R385	ERD25FJ822	Carbon	8.2KΩ	¼W
R386	ERD25FJ103	Carbon	10KΩ	¼W
R387	ERD25FJ184	Carbon	180KΩ	¼W
R388,389	ERD25FJ103	Carbon	10KΩ	¼W
R390	ERD25FJ203	Carbon	20KΩ	¼W
R391	ERD25FJ243	Carbon	24KΩ	¼W
R392	ERD25FJ472	Carbon	4.7KΩ	¼W
BR301	EXBH810083JB	Block Resistor		
BR302	EXBH88084GB	Block Resistor		
BR303	*EXBH85105JB	Block Resistor		
VR301	YWH0651A470	Variable Resistor	470Ω	
VR302	YWH0651A22K	Variable Resistor	22KΩ	
VR303	YWH0651A4R7K	Variable Resistor	4.7KΩ	
VR304	YWH0651A22K	Variable Resistor	22KΩ	
VR305	YWH0651A330	Variable Resistor	330Ω	
VR306	YWH0651A2R2K	Variable Resistor	2.2KΩ	
VR307,308	YWH0651A10K	Variable Resistor	10KΩ	
VR309	YWH0651A330	Variable Resistor	330Ω	
VR310	YWH0651A10K	Variable Resistor	10KΩ	
VR311~314	YWH0651A220K	Variable Resistor	220KΩ	
VR315	YWH0651A10K	Variable Resistor	10KΩ	
VR316	YWH0651A22K	Variable Resistor	22KΩ	
VR317,318	YWH0651A1K	Variable Resistor	1KΩ	
VR319,320	YWH0651A10K	Variable Resistor	10KΩ	
VR321	YWH0651A1K	Variable Resistor	1KΩ	
VR322,323	YWH0651A10K	Variable Resistor	10KΩ	
C301	ECEA1AS470	Electrolytic	47μF	10V
C302	ECEA1AN470	Electrolytic	47μF	10V
C303	ECCF1H270JC	Ceramic	27pF	50V
C304	ECEA1AN470	Electrolytic	47μF	10V
C305	ECEA1CS220	Electrolytic	22μF	16V
C306,307	ECEA1AS470	Electrolytic	47μF	10V

SYM-BOL NO.	PART NO.	DESCRIPTION		
C308	ECCF1H680K	Ceramic	68pF	50V
C309	ECEA1AS470	Electrolytic	47μF	10V
C310	ECEA1CS100	Electrolytic	10μF	16V
C311	ECQP1301JZ	Polypropylene	300pF	100V
C312	ECCF1H101JR	Ceramic	100pF	50V
C313	ECEA1CS100	Electrolytic	10μF	16V
C314	ECCF1H680K	Ceramic	68pF	50V
C315	*ECQV05104JZ	TF Capacitor	0.1μF	50V
C316~318	ECEA1AS470	Electrolytic	47μF	10V
C319,320	ECQP1221JZ	Polypropylene	220pF	100V
C321	ECCF1H151JZ	Ceramic	150pF	50V
C322	ECCF1H560JR	Ceramic	56pF	50V
C323	ECQM1H472KZ	Polyester	0.0047μF	50V
C324	ECKF1H271K	Ceramic	270pF	50V
C325	ECEA1AS470	Electrolytic	47μF	10V
C326	ECEA1CS100	Electrolytic	10μF	16V
C327	ECSF35ER47	Tantalum	0.47μF	35V
C328	ECEA1AS470	Electrolytic	47μF	10V
C329	ECKF1H102KB	Ceramic	1000pF	50V
C330	ECEA1HK010	Electrolytic	1μF	50V
C331	ECEA1AS470	Electrolytic	47μF	10V
C332	ECEA1CS100	Electrolytic	10μF	16V
C333	ECEA1AS470	Electrolytic	47μF	10V
C334	ECCF1H470JR	Ceramic	47pF	50V
C335	*ECQP1271JZ	Polypropylene	270pF	100V
C336	ECCF1H180JR	Ceramic	18pF	50V
C337~340	ECQM1H472KZ	Polyester	0.0047μF	50V
C341	ECEA1CS100	Electrolytic	10μF	16V
C342	ECQM1H472KZ	Polyester	0.0047μF	50V
C343	ECSF10E3R3	Tantalum	3.3μF	10V
C344~346	ECEA1CS100	Electrolytic	10μF	16V
C347	ECEA1AS470	Electrolytic	47μF	10V
C348,349	ECEA1CS100	Electrolytic	10μF	16V
C350	ECKF1H681K	Ceramic	680pF	50V
C351	ECEA1HS3R3	Electrolytic	3.3μF	50V
C352	ECEA1AS101	Electrolytic	100μF	10V
C353	ECEA0JS101	Electrolytic	100μF	6.3V
C354	ECSF10E3R3	Tantalum	3.3μF	10V
C355	ECCF1H560K	Ceramic	56pF	50V
C356	ECCF1H470K	Ceramic	47pF	50V
C357	ECEA1AS470	Electrolytic	47μF	50V
C358	ECEA1CS100	Electrolytic	10μF	16V
C359,360	ECEA1AS470	Electrolytic	47μF	10V
C361	ECEA1AS102	Electrolytic	1000μF	10V
C362	ECSF10E3R3	Tantalum	3.3μF	10V
C363	ECQM1H472KZ	Polyester	0.0047μF	50V
C364,365	ECEA1AS470	Electrolytic	47μF	10V
C366,367	ECEA1HS010	Electrolytic	1μF	50V
C368	ECEA1AS470	Electrolytic	47μF	10V
C369,370	ECEA1HS010	Electrolytic	1μF	50V
C371	ECEA1CS100	Electrolytic	10μF	16V
C372~375	ECQM1H472KZ	Polyester	0.0047μF	50V
C376	ECEA1CS100	Electrolytic	10μF	16V
C377	ECSF10E10	Tantalum	10μF	10V
C378	ECCF1H151JC	Ceramic	150pF	50V

SYM-BOL NO.	PART NO.	DESCRIPTION		
C379	ECKF1H102KB	Ceramic	1000pF	50V
C380~382	ECQM1H472KZ	Polyester	0.0047μF	50V
C383	ECSF6E47	Tantalum	47μF	6V
C384	ECEA1CS100	Electrolytic	10μF	16V
C385	ECEA1AS101	Electrolytic	100μF	10V
C386,387	ECEA1AS470	Electrolytic	47μF	10V
C388,389	ECKF1H102KB	Ceramic	1000pF	50V
C390	ECEA1AS221	Electrolytic	220μF	10V
C391	ECKF1H102KB	Ceramic	1000pF	50V
C392	*ECQM1H103KZ	Polyester	0.01μF	50V
C393	ECCF1H151JR	Ceramic	150pF	50V
C394	ECQM1H103KZ	Polyester	0.01μF	50V
C395	ECEA50N1	Electrolytic	1μF	50V
C396	ECCF1H180JC	Ceramic	18pF	50V
C397	ECCF1H080JC	Ceramic	8pF	50V
C398	*ECQP1621JZ	Polypropylene	620pF	100V
C399	ECCF1H040DC	Ceramic	4pF	50V
C400,401	ECCF1H470JC	Ceramic	47pF	50V
VC301	ECV1NW40X74B	Trimmer Capacitor	40pF	
VC302	ECV1NW20X74B	Trimmer Capacitor	20pF	
L301	ELQ-082C10A	Inductor	8.2μH	
L302	*YWEL06SK8R2K	Inductor	8.2μH	
L303	YWLS-7471J	Inductor	470μH	
L304	YWLS-7221J	Inductor	220μH	
L305	YWLS-151J	Inductor	150μH	
L306	YWLS-7270J	Inductor	27μH	
L307	*YWEL06SK8R2K	Inductor	8.2μH	
L308	ELQ-082C10A	Inductor	8.2μH	
L309	YWLS-7390J	Inductor	39μH	
L310	YWLS-7101J	Inductor	100μH	
L311	YWLS-76R8J	Inductor	6.8μH	
L312,313	YWLS-7150J	Inductor	15μH	
L314	YWLS-7390J	Inductor	39μH	
L315	ELQ-082C10A	Inductor	8.2μH	
L316,317	*YWEL06SK8R2K	Inductor	8.2μH	
L318	YWLS-78R2J	Inductor	8.2μH	
L319	YWLS-7821J	Inductor	820μH	
L320	ELQ-082C10A	Inductor	8.2μH	
L321	*ELL-7E012D	Inductor		
L322	*YWEL06SK560J	Inductor	560μH	
L323	YWLS-7560J	Inductor	56μH	
CL301	EFC A3R58MB3	Trap	3.58MHZ	
DL301	ELT10S501	Delay Line		
DL302	ELT8D102	Delay Line		
DL303	*EFDMN645B81B	Delay Line		
DL304	*EFDEN645A13A	Delay Line		
ZT301	*ELB6D718	Frequency Trap		
ZT302	*ELB6D720	Frequency Trap		
ZT303,304	*ELB6D719	Frequency Trap		
T301~303	*ELT7Q707A	Intermediate Frequency Transformer		
T304	*ELT7Q707B	Intermediate Frequency Transformer		
CN301-JM	EMCS0350	3-Pin Jack Male		
CN302-JM	EMCS0650	6-Pin Jack Male		
CN303-JM	EMCS0950	9-Pin Jack Male		
CN304-JM	EMCS0450	4-Pin Jack Male		
CN305-JM	EMCS0650	6-Pin Jack Male		
CN306-JM	EMCS0350	3-Pin Jack Male		
M056	*YVZC601KM04C	Shield Case E		

SYM-BOL NO.	PART NO.	DESCRIPTION
M057	YVZC601KM05C	Shield Case E
M058	*YVZC601LR03A	Insulator Paper

YWV4001ZK04 LED CIRCUIT BOARD

PCB004	*YWV4001ZK04	Printed Circuit Board Assembly
D401,402 ⚠	LN23SRP	Light Emitting Diode (Red)
R401 ⚠	ERD25FJ272	Carbon 2.7KΩ ¼W
CN202-PF	EMCB1024C53V	10-Pin Plug Female
M055	*YVZC601FR05	LED Holder (x2)

YWV4001ZK06 ZOOM CIRCUIT BOARD

PCB006	*YWV4001ZK06	Printed Circuit Board Assembly
Q601	2SC1317-QR	Transistor
R601	ERD25FJ332	Carbon 3.3KΩ ¼W
R602	ERD25FJ122	Carbon 1.2KΩ ¼W
R603	ERD25FJ100	Carbon 10Ω ¼W
R604	ERD25FJ331	Carbon 330Ω ¼W
C601,602	ECEA1AS221	Electrolytic 220μF 10V

YWV4001ZK07 BOOM MIC CIRCUIT BOARD

PCB007	*YWV4001ZK07	Printed Circuit Board Assembly
MiC	WM-4003KA	Boom Microphone
CN701-JM	EMCS0350L	3-Pin Jack Male

YWV4001ZK13 VIDICON SOCKET CIRCUIT BOARD

PCB013	*YWV4001ZK13	Printed Circuit Board Assembly
C1301	ECWH10H682KZ	Metalized Polypropylene 0.0068μF1000V
CN005	*YWSB612J02	Vidicon Socket

ADJUSTABLE HANDLE GRIP CC-402

SW001	YWKSR11	Start/stop Switch for Remote Control
CN002-PM	YWME25LXA	Remote Control Plug (M2)
M060	*YVZC602KR01C	Grip Base
M061	YVZC602KR02	Handle Grip Right Cover
M062	YVZC602KR03A	Handle Grip Left Cover
M063	YVZC602MM01A	Clutch A
M064	YVZC602MM02A	Clutch B
M065	YVZC602DR01	Clutch Cover
M066	YVZC602FR01	Handle Strap Holder
M067	YVZC602LM01	Blindfold Plate
M068	YVZC602LM02	Nut Plate A for Belt
M069	YVZC602LM03	Nut Plate B for Belt
M070	YVZC602KR04	Shoulder Pad
M071	YVZC602HR01A	Handle Strap
M072	YVZC602HR02	Handle Grip Lock Knob
M073	YVZC602HR03A	Handle Strap Knob
M074	YVZC602HR04	Knob for Start/stop Switch
M075	YVZC602WM01	Spring Plate for Start/stop Switch
M076	YVZC602WB01	Damper A
M077	YVZC602WB02	Damper B

E.V.F. MOUNTING ASSEMBLY VZ-C603A

M080	YVZC603AR99	Mounting Bracket Assembly
M082	YVZC603AR03	Finder Holder
M084	YVZC603HR01	Finder Lock Knob
M085	YVZC603HR02B	Finder Knob
M086	YVZC603HR03	View Finder Lock Knob
M088	YVZC603LR01A	Spacer for Bracket
M089	YVZC603LR02	Spacer Plate
M090	YVZC603LR03A	Spacer Plate
M091	YVZC603LB02A	Rubber Sheet (x2)
M092	YVZC603LB03	Adhesive Sheet (x2)
M093	YVZC603LR04	Spacer for Viewfinder Joint Knob
M094	YVZC603LR05	Spacer for Finder Lock Knob
M095	YVZC603AHB1	Dust Cap for Spacer Plate
M096	YVZC603ALB1	Adhesive Sheet for Spacer Plate

E.V.F. WV-3204N/3202E

CRT002 ⚠	40CB4M	Cathode Ray Tube
L806	ELY-15V001A	Deflection Coil
CN801-PF	ZMCB0425A55	4-Pin Plug Female
M101	YVZC604KR01	Top Cover
M102	YVZC604KR02	Bottom Cover
M103	YVZC604FR01	Viewfinder Lens Holding Ring
M105	YVZC604AM01	Holder for CRT
M106	YVZC604WB01	Rubber for CRT
M107	YVZC604WB02A	Cushion for CRT
M108	YVZC604LM01	Support Bracket (x2)
M109	YVZC604UM01	Front Logo Overlay
M110	YWV3204NUR1	Blank Label for WV-3204N
	YWS-XEGRB06	X-Ray Label for WV-3204E
M112	YW-G-UR02A	X-Ray Label for WV-3204E
M113	YVZC604LB01	Viewfinder Lens
M114	YWV3804WB02	Eye Cap
M115	YWCC404UM02A	CRT Panel
M116	YVZC604LR01	Neck Spacer for CRT

YWV3206EZK08 E.V.F. CIRCUIT BOARD

PCB008	YWV3206EZK08	Printed Circuit Board Assembly
IC801	HA17555PS	Integrated Circuit
IC802	AN374P	Integrated Circuit
Q801	2SC828-RS	Transistor
Q802	2SA564-RS	Transistor

SYMBOL NO.	PART NO.	DESCRIPTION		
Q803	2SC828-RS	Transistor		
Q804,805	2SA564-RS	Transistor		
Q806	2SC828-RS	Transistor		
Q807	2SA564-RS	Transistor		
Q808	2SC1567A-RS	Transistor		
Q809	3SF11-Q	Transistor		
Q810	2SA564-RS	Transistor		
Q811	2SC1566	Transistor		
Q812	2SC828-RS	Transistor		
D801	MA26	Diode		
D802~804	MA150	Diode		
D805	XZ-062	Diode		
D806	YUDUF-1	Diode		
R801	ERD25FJ102	Carbon	1KΩ	1/8W
R802	ERD25FJ101	Carbon	100Ω	1/8W
R803	ERD25FJ561	Carbon	560Ω	1/8W
R804,805	ERD25FJ103	Carbon	10KΩ	1/8W
R806	ERD25FJ123	Carbon	12KΩ	1/8W
R807,808	ERD25FJ223	Carbon	22KΩ	1/8W
R809	ERD25FJ682	Carbon	6.8KΩ	1/8W
R810	ERD25FJ822	Carbon	8.2KΩ	1/8W
R811	ERD25FJ123	Carbon	12KΩ	1/8W
R812	ERD25FJ132	Carbon	1.3KΩ	1/8W
R813	ERD25FJ332	Carbon	3.3KΩ	1/8W
R814	ERD25FJ223	Carbon	22KΩ	1/8W
R815	ERD25FJ560	Carbon	56Ω	1/8W
R816 ⚠	ERD25FJ152	Carbon	1.5KΩ	1/8W
R817	ERD25FJ333	Carbon	33KΩ	1/8W
R818	ERD25FJ104	Carbon	100KΩ	1/8W
R819	ERD25FJ474	Carbon	470KΩ	1/8W
R820	ERD25FJ225	Carbon	2.2MΩ	1/4W
R821	ERD25FJ394	Carbon	390KΩ	1/8W
R822	ERD25FJ125	Carbon	1.2MΩ	1/4W
R823	ERD25FJ393	Carbon	39KΩ	1/8W
R824	ERD25FJ123	Carbon	12KΩ	1/8W
R825	ERD25FJ103	Carbon	10KΩ	1/8W
R826	ERD25FJ223	Carbon	22KΩ	1/8W
R827	ERD25FJ3R3	Carbon	3.3Ω	1/4W
R828	ERD25FJ102	Carbon	1KΩ	1/9W
R829	ERD25FJ152	Carbon	1.5KΩ	1/8W
R830	ERD25FJ103	Carbon	10KΩ	1/8W
R831	ERD25FJ182	Carbon	1.8KΩ	1/8W
R832	ERD25FJ221	Carbon	220Ω	1/8W
R833	ERD25FJ182	Carbon	1.8KΩ	1/8W
R834	ERD25FJ392	Carbon	3.9KΩ	1/8W
R835	ERD25FJ122	Carbon	1.2KΩ	1/8W
BR801	EXB-H89075J	Block Resistor		
BR802	EXB-H85104J	Block Resistor		
BR803	EXB-H88074J	Block Resistor		
VR801	EVNK2AA00B13	Variable Resistor	1KΩ	
VR802	EVNK2AA00B14	Variable Resistor	10KΩ	
VR803	YWSR29R220KB	Variable Resistor	220KΩ	
VR804	YWCR29R2R2MB	Variable Resistor	2.2MΩ	
VR805	EVNK2AA00B32	Variable Resistor	300Ω	
C801	ECEA1CS470	Electrolytic	47μF	16V

SYMBOL NO.	PART NO.	DESCRIPTION		
C802	ECEA1HS010S	Electrolytic	1μF	50V
C803	ECQM1H273KZ	Polyester	0.027μF	50V
C804	ECEA1AS221	Electrolytic	220μF	10V
C805	ECEA1CS100	Electrolytic	10μF	16V
C806	ECEA1HS3R3	Electrolytic	3.3μF	50V
C807,808	ECQM1H103KZ	Polyester	0.01μF	50V
C809	ECEA1HS010S	Electrolytic	1μF	50V
C810	ECQM1H273KZ	Polyester	0.027μF	50V
C811	ECQM1H822KZ	Polyester	0.0082μF	50V
C812	ECSF10E2R2	Tantalum	2.2μF	10V
C813	ECQM1H103JZ	Polyester	0.01μF	50V
C814	ECEA1HSR47S	Electrolytic	0.47μF	50V
C815	ECEA0JS101	Electrolytic	100μF	6.3V
C816	ECQM1H273KZ	Polyester	0.027μF	50V
C817 ⚠	ECQM1682JZ	Polyester	0.0068μF	100V
C818	ECEA1CS470	Electrolytic	47μF	16V
C819	ECEA1AS221	Electrolytic	220μF	10V
C820	ECEA2SA010	Electrolytic	1μF	100V
C821	ECKD3A102KB	Ceramic	1000pF	1KV
C822	ECEA160V1U	Electrolytic	1μF	160V
C823	ECKD3A102KB	Ceramic	1000pF	1KV
C824	ECKD2H102KB	Ceramic	1000pF	500V
C825	ECQM1H223JZ	Polyester	0.022μF	50V
C826	ECQM1H103KZ	Polyester	0.01μF	50V
C827	ECSF10E2R2K	Tantalum	2.2μF	10V
C828	ECEA1CS100	Electrolytic	10μF	16V
C829	ECQM1H103KZ	Polyester	0.01μF	50V
C830	ECEA0JS471	Electrolytic	470μF	6.3V
C831	ECEA1CS470	Electrolytic	47μF	16V
C832	ECKD1H471KB	Ceramic	470pF	50V
C833	ECEA2AS100	Electrolytic	10μF	100V
C834	ECEA1HSR47	Electrolytic	0.47μF	50V
C835	ECSF16E33	Tantalum	33μF	16V
L801	YWLS-7101J	Inductor	100μH	
L802	ELQ402D008	High Frequency Coil	4mH	
L803	YWLS-7101J	Inductor	100μH	
L804 ⚠	ELQ101D036	High Frequency Coil	100μH	
L805 ⚠	YWHL3202	Linearity Coil	475μH	
L807	YWLS-7431J	Inductor	430μH	
CL801	EFCA4R43MB3	Trap		
T801 ⚠	YWFBT3202	High Voltage Unit		
TP801,802	YW4000P	Test Point		
CN801-JM	EMCS0450	4-Pin Jack Male		
CN802-PF	RP610P8P37X	8-Pin Plug Female		
CN803	YWS7-5A6P-33	CRT Socket		
M104	*YVZC604WM01	Leaf Spring for Earth		

YWV3206EZK09
E.V.F. INDICATOR CIRCUIT BOARD

PCB009	*YWV3206EZK09	Printed Circuit Board Assembly		
IC901	NJM2903D	Integrated Circuit		
Q901	2SA564-RS	Transistor		
D901	YUDERB12-01	Diode		
R901	ERE25FJ103	Carbon	10KΩ	1/8W

SYM-BOL NO.	PART NO.	DESCRIPTION		
R902	ERD25FJ513	Carbon	51KΩ	1/8W
R903	ERD25FJ153	Carbon	15KΩ	1/8W
R904	ERD25FJ103	Carbon	10KΩ	1/8W
R905	ERD25FJ124	Carbon	120KΩ	1/8W
R906,907	ERD25FJ332	Carbon	3.3KΩ	1/8W
R908	ERD25FJ682	Carbon	6.8KΩ	1/8W
R909	ERD25FJ151	Carbon	150Ω	1/8W
R910	ERD25FJ682	Carbon	6.8KΩ	1/8W
R911	ERD25FJ333	Carbon	33KΩ	1/8W
R912	ERD25FJ332	Carbon	3.3KΩ	1/8W
R913	ERD25FJ103	Carbon	10KΩ	1/8W
C901	ECEA1CS100	Electrolytic	10μF	16V
C902	ECEA1HS010	Electrolytic	1μF	50V
C903	ECQM1H273KZ	Polyester	0.027μF	50V
C904	ECEA1AS221	Electrolytic	220μF	10V
C905	ECQM1H103KZ	Polyester	0.01μF	50V
C906	ECEA1HS010	Electrolytic	1μF	50V

YWV3206EZK10
E.V.F. LED BOARD

PCB010	YWV3206EZK10	Printed Circuit Board Assembly
D1001	LN23SRP	Light Emitting Diode (Red)
D1002	LN43SYP	Light Emitting Diode
M117	YVZC604UR01	LED Holder

ACCESSORY PARTS/PACKAGING PARTS

M130 *	YWV3200NRB1	Instruction Book for WV-3200N
	YWV3200ERB1	Instruction Book for WV-3200E
M131	YWT10X16C03	Polyethylene Bag for Instruction Book
M132	XZB20X35A02	Polyethylene Bag for Finder Hidder
M133	XZB26X40C05	Polyethylene Bag for E.V.F and Cord
M134	XZB38Y60A02	Polyethylene Bag for Camera
M140 *	YWV3200NPB1	Packaging Case for WV-3200N
	YWV3200EPB1	Packaging Case for WV-3200E

POWER SUPPLY
WV-PS01N/PS01E

MISCELLANEOUS

PT101 ⚠	YWHPE354E41A	Power Transformer
E101 ⚠	YWKP56LT2F22	Power Cord for WV-PS01N/A
	YWKP4192F22	Power Cord for WV-PS01N, PS01E/C
	YWGTBS2F	Power Cord for WV-PS01E/B
E102	YWONOB3200A	Output Cord
M150	YVZCA66KR01	Bottom Cover
M151	YVZCA66KR02	Top Cover
M152	YWVPS01NUM1	Top Overlay for WV-PS01N, N/A
	YWV550PUM51	Top Overlay for WV-PS01E/B, E/C
M153	YWV3303LM04	Support Plate for Transformer (x2)
M154	YWV470-HR51	Knob
M155	YWV470-WB51	Rubber Feet (x4)
M156	YVZCA66LB01	Insulator Cover (x2)
M158	YWV470-AM52	Fastening Plate for Power Cord
M159	YWSR4N-4	Cord Bushing

SYM-BOL NO.	PART NO.	DESCRIPTION
M161	YWVPS01NUR1	Main Label for WV-PS01N, PS01N/A
	YWVPS01EUR1	Main Label for WV-PS01E/B, PS01E/C
M164	YWV470-UB52	Rear Label
M165	YWV470-UB51	Front Label
M168	YWV460EKR51	AC Outlet Socket
M169	YW-B-UR01	Made in Japan Label for WV-PS01E/B

YWV3203EZK11
POWER SUPPLY CIRCUIT BOARD

PCB101	YWV3203EZK11	Printed Circuit Board Assembly		
D101~103	YWDR02Z	Diode		
D104 ⚠	YWDR02Z	Diode		
D105 ⚠	LN23L	Light Emitting Diode		
R101 ⚠	ERD50TJ821	Carbon	820Ω	½W
R103 ⚠	ERD25FJ201	Carbon	200Ω	¼W
J101 ⚠	ERD14T0	Jumper Resistor		
C101 ⚠	ECET25R472	Electrolytic	4700μF	25V
SW101 ⚠	YW1P31AC2020	Power Switch		
F101 ⚠	YWTS125MA	Fuse		
E103 ⚠	YWSN5053	Fuse Holder		
M160	YWE6400FR99	Light Emitting Diode Holder		
M171	YWVPS01ELB1	Insulator Paper		

YWV3203EZK12
CONNECTED BOARD

PCB102	YWV3203EZK12	Printed Circuit Board Assembly
CN101-JF	RM15TRD-10SB	10-Pin Jack Female
M157	YWV550-AM51	Fastening Bracket for Connector

ACCESSORY PARTS/PACKAGING PARTS

CN010	YWRCAMBNCFA	BNC-RCA Adaptor
M175	YWVPS01NRB1	Instruction Book for WV-PS01N, PS01N/A
	YWVPS01ERB1	Instruction Book for WV-PS01E/B, E/C
M176	YWT15X20C03	Polyethylene Bag for Instruction Book
M177	XZB20X35A02	Polyethylene Bag for Set
M180	YWVPS01NPB1	Packaging Case for WV-PS01N, PS01N/A
	YWVPS01EPB1	Packaging Case for WV-PS01E/B, PS01E/C

EXPLODED VIEW OF CAMERA

PCB001	YWV3201EZK01
PCB002	YWV3201EZK02
PCB003	YWV3201EZK03
PCB004	YWV4001ZK04
PCB006	YWV4001ZK06
PCB007	YWV4001ZK07
PCB013	YWV4001ZK13
V001	S4094P
Q001	2SA1061-P
X001	TWXTALLPF23
X002	YW1R1X13R
L001	ELY-18A201B
E001	YWCABLE4000
SW002	YWSSM023
SW003	YWSSB042
CN001	YW-SJ296
CN002-JF	YWM0J-A5C
CN002-PM	YWME25LXA
CN005	YWSB612J02
CN201-JM	EMCS0650
CN201-PF	EMCHUR0601K
CN202JM	EMCS1050
CN202-PF	EMC1024C53V
CN203JM	EMCS0850
CN203-PF	EMCHUR0801K
CN204-JM	EMCS0650
CN204-PF	EMCHUR0601KB
CN205-JM	EMCS0650
CN205-PF	EMCHUR0601K
CN206-JM	EMCS0650
CN206-PF	EMCB0614D53X
CN301-JM	EMCS0350
CN301-PF	EMCB0318B52X
CN302-JM	EMCS0650
CN302-PF	EMCHUR0601K
CN303-JM	EMCS0950
CN303-PF	EMCB0917D54Y
CN304-JM	EMCS0450
CN304-PF	EMCB0413D52Y
CN305-JM	EMCS0650
CN305-PF	EMCB628D52Y
CN306-JM	EMCS0350
CN306-PF	EMCHUR0301K
CN701-JM	EMCS0350L
CN701-PF	EMCHUR0301K

M001	YWV3200EKR02
M002	YWCC401KR08A
M003	YVZC601KR04
M004	YVZC601HR01A
M005	YVZC601HR02A
M006	YVZC601LM01B
M008	YVZC601KR99
M009	YVZC601KR98
M010	YWV3200NDM01 YWV3200EDM01
M012	YWCC401UM01
M014	YVZC601CM01C
M015	YVZC601FR01
M016	YVZC601FR02
M017	YVZC601AM02A
M018	YVZC601AM03A
M019	YVZC601FM01A
M020	YVZC601WB02B
M021	YVZC601FR03
M022	YVZC601KM01
M024	YVZC601LM03A
M026	YVZC601FR04A
M027	YWV550-WM01A
M028	YVZC601KR01
M029	YVZC601UM02A YWV3200EUM2
M030	YVZC601AM04
M032	YVZC601KR07B
M033	YWV550-DR01
M034	YWV550-FB02A
M035	YVZC601WB01
M036	YVZC601LM02A
M037	YVZC601AM01
M038	YMV550-WM03
M039	YPM-KM276BA4
M040	YWV3200NUR1 YWV3210EUR1
M042	YWCC401UR03A
M046	YVZC601KM02
M047	YVZC601KM03
M048	YVZC601LR02
M051	YVZC601KM06A
M052	YVZC601LR04A
M055	YVZC601FR05
M056	YVZC601KM04C
M057	YVZC601KM05C
M058	YVFC601LR03A
M073	YVZC602HR03A
M201	YW618146
M202	YW618036
M203	YW618201

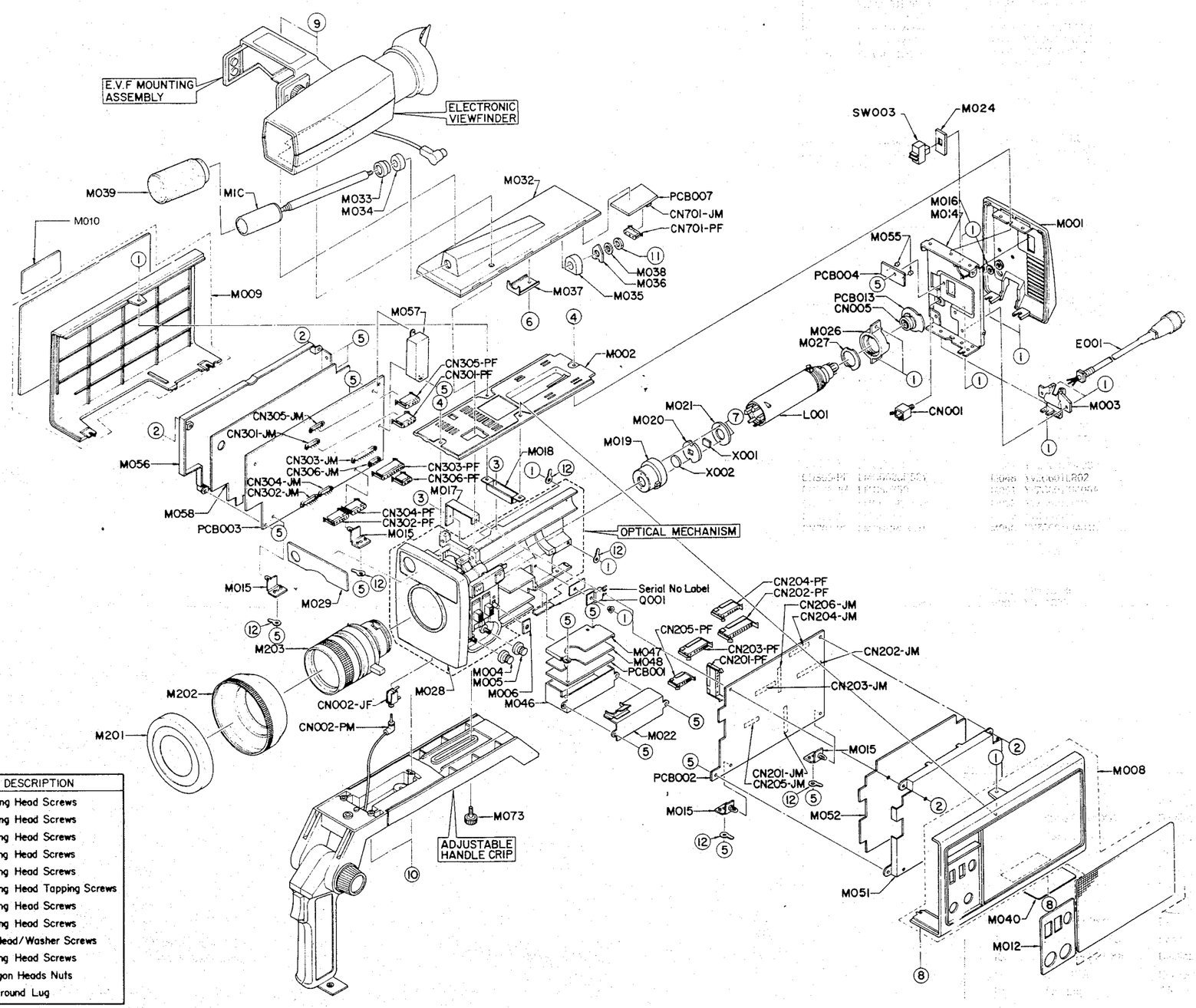

◯Numbers Show Screws

SCREW NO.	PART NO.	DESCRIPTION
①	XSB26+6FX	Binding Head Screws
②	XSB26+6FXV	Binding Head Screws
③	XSB26+4FX	Binding Head Screws
④	XSB26+8FX	Binding Head Screws
⑤	XSB26+4FXV	Binding Head Screws
⑥	XTB26+6FXK	Binding Head Tapping Screws
⑦	XSB2+4FX	Binding Head Screws
⑧	XSB26+8FC	Binding Head Screws
⑨	XYN26+AI2FC	Pan Head/Washer Screws
⑩	XSB26+22FXK	Binding Head Screws
⑪	XNS8FX	Hexagon Heads Nuts
⑫	Φ3 Lug	Φ3 Ground Lug

EXPLODED VIEW

OPTICAL MECHANISM

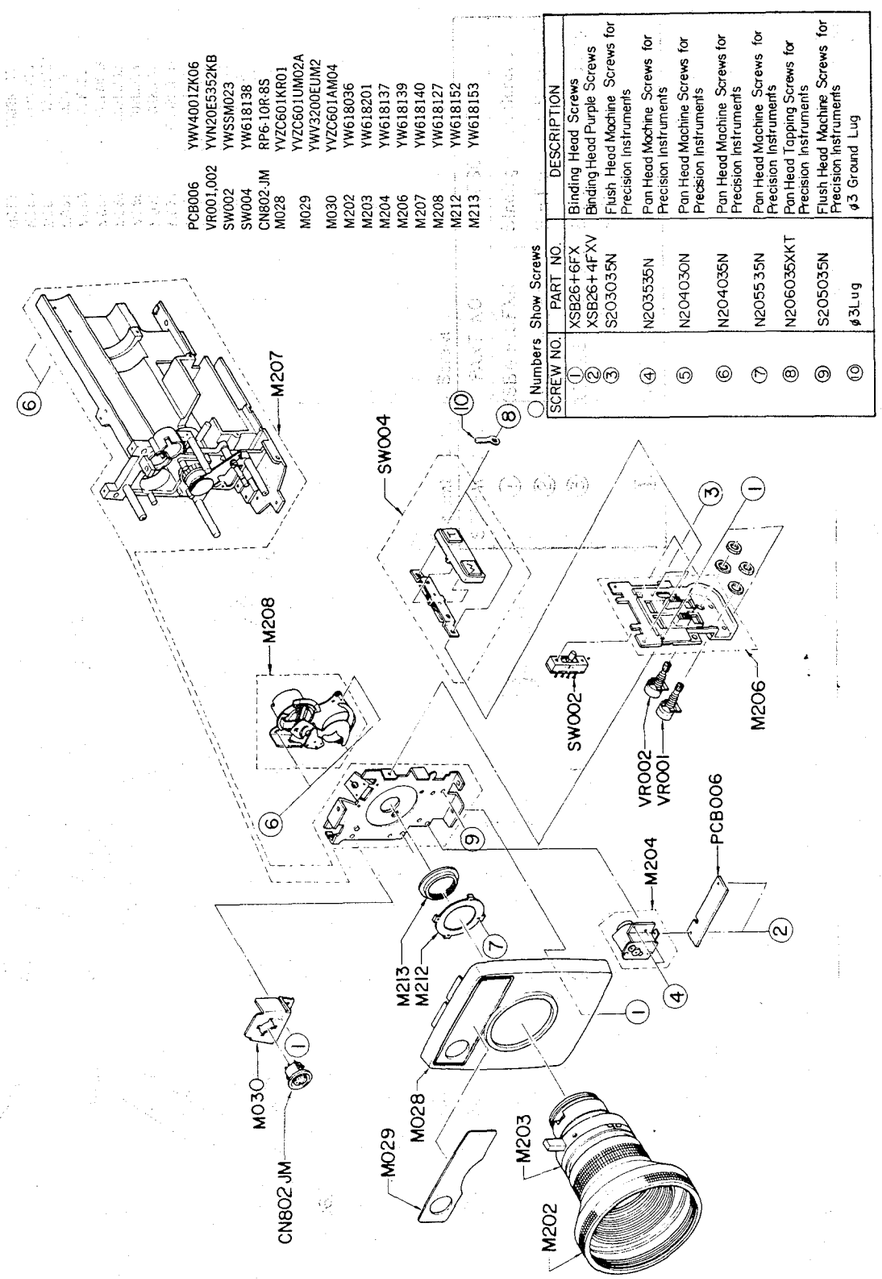

○Numbers Show Screws

SCREW NO.	PART NO.	DESCRIPTION
①	XSB26+6FX	Binding Head Screws
②	XSB26+4FXV	Binding Head Purple Screws
③	S203035N	Flush Head Machine Screws for Precision Instruments
④	N203535N	Pan Head Machine Screws for Precision Instruments
⑤	N204030N	Pan Head Machine Screws for Precision Instruments
⑥	N204035N	Pan Head Machine Screws for Precision Instruments
⑦	N205535N	Pan Head Machine Screws for Precision Instruments
⑧	N206035XKT	Pan Head Tapping Screws for Precision Instruments
⑨	S205035N	Flush Head Machine Screws for Precision Instruments
⑩	ø3Lug	ø3 Ground Lug

ADJUSTABLE HANDLE GRIP

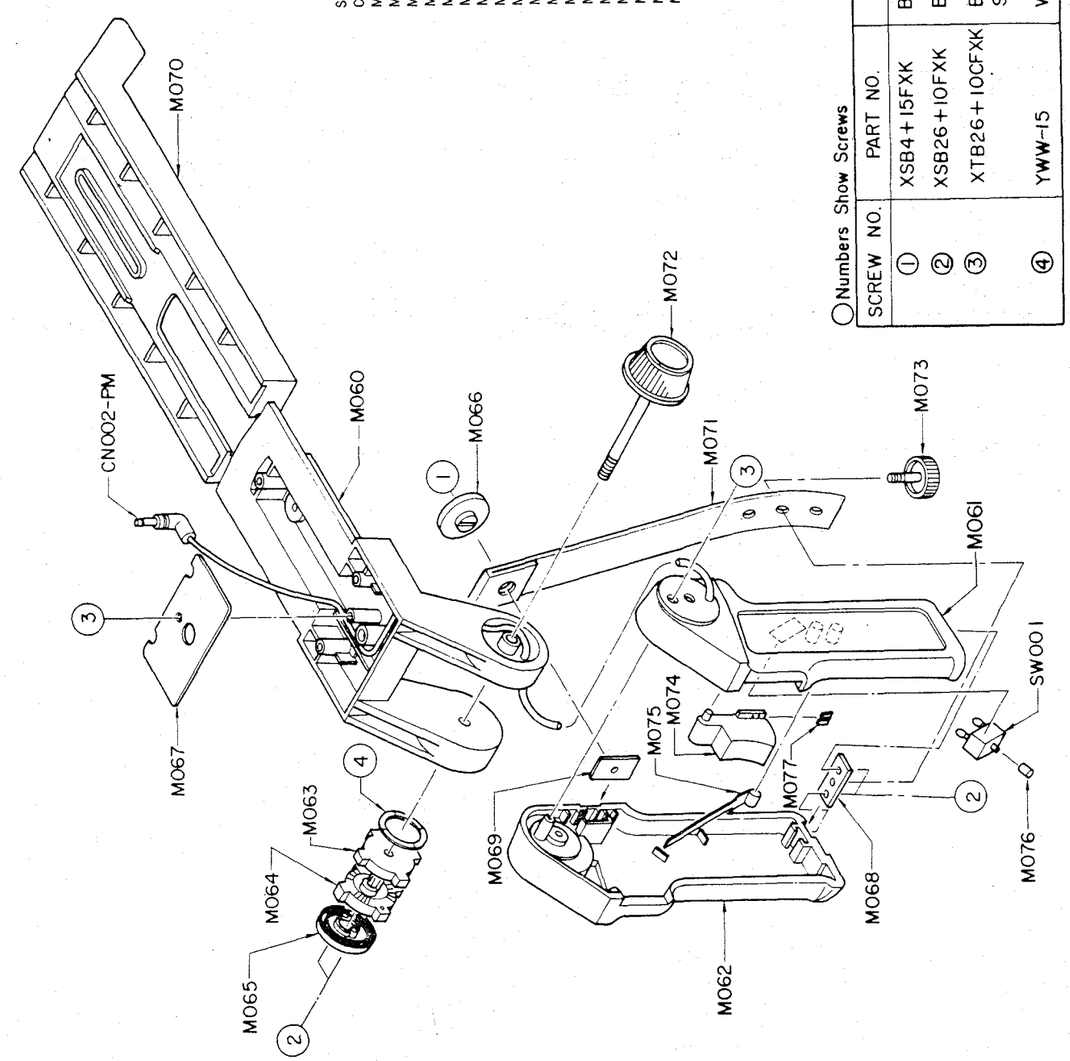

○Numbers Show Screws

SCREW NO.	PART NO.	DESCRIPTION
①	XSB4+15FXK	Binding Head Screws
②	XSB26+10FXK	Binding Head Screws
③	XTB26+10CFXK	Binding Head Tapping Screws
④	YWW-15	Wave Washer

EXPLODED VIEW OF VIEWFINDER

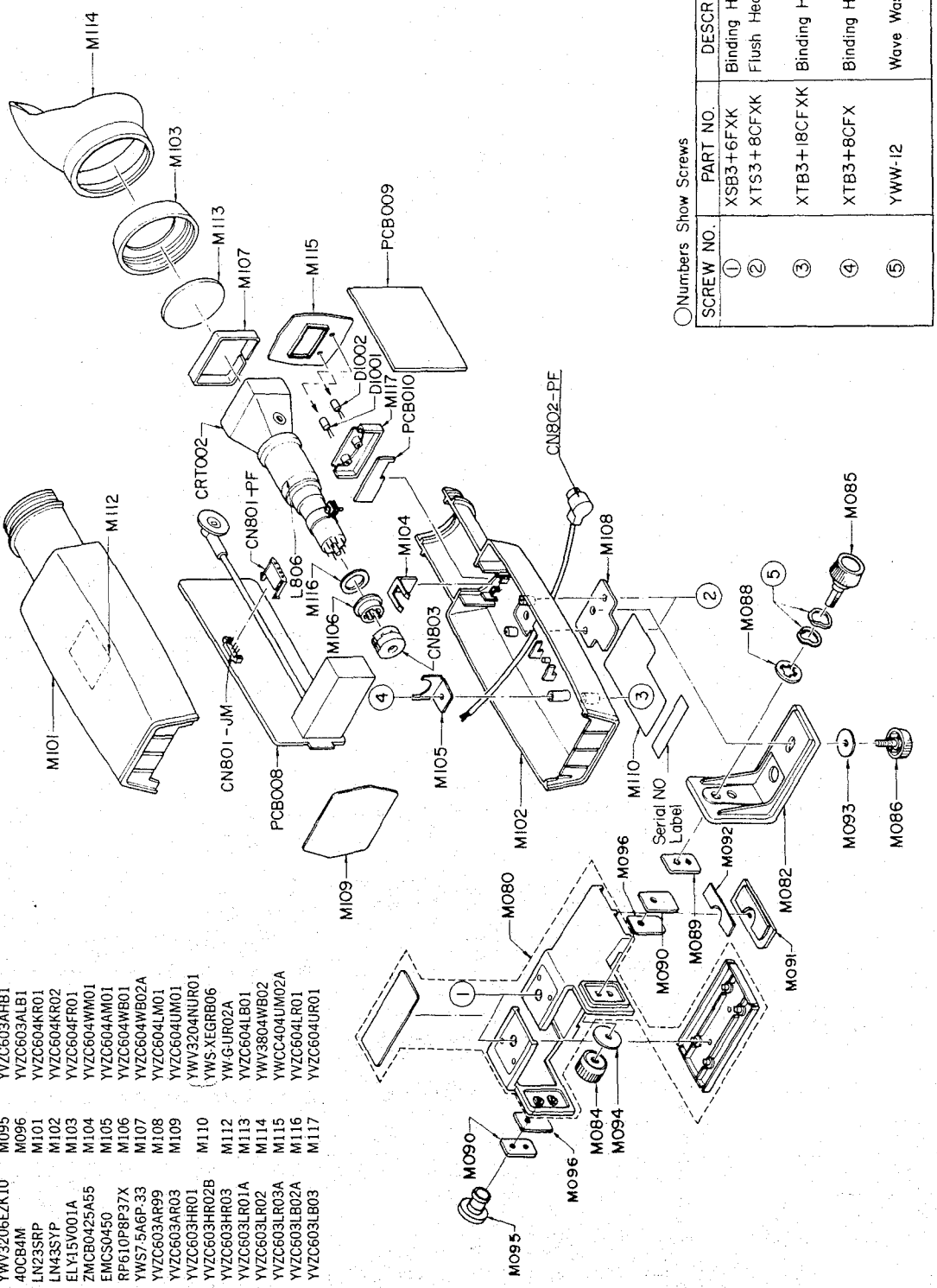

SCREW NO.	PART NO.	DESCRIPTION
①	XSB3+6FXK	Binding Head Screws
②	XTS3+8CFXK	Flush Head Screws
③	XTB3+18CFXK	Binding Head Tapping Screws
④	XTB3+8CFX	Binding Head Tapping Screws
⑤	YWW-12	Wave Washer

PCB008	YWV3206EZK08	M093	YVZC603LR04
PCB009	YWV3206EZK09	M094	YVZC603LR05
PCB010	YWV3206EZK10	M095	YVZC603AHB1
CRT002	40CB4M	M096	YVZC603ALB1
D1001	LN23SRP	M101	YVZC604KR01
D1002	LN43SYP	M102	YVZC604KR02
L806	ELY15V001A	M103	YVZC604FR01
CN801-PF	ZMCB0425A55	M104	YVZC604WM01
CN801-JM	EMCS0450	M105	YVZC604AM01
CN802-PF	RP610P8P37X	M106	YVZC604WB01
CN803	YWS7-5A6P-33	M107	YVZC604WB02A
M080	YVZC603AR99	M108	YVZC604LM01
M082	YVZC603AR03	M109	YVZC604UM01
M084	YVZC603HR01	M110	YWV3204NUR01
M085	YVZC603HR02B		YWS-XEGRB06
M086	YVZC603HR03	M112	YW-G-UR02A
M088	YVZC603LR01A	M113	YVZC604LB01
M089	YVZC603LR02	M114	YWV3804WB02
M090	YVZC603LR03A	M115	YWCC404UM02A
M091	YVZC603LB02A	M116	YVZC604LR01
M092	YVZC603LB03	M117	YVZC604UR01

EXPLODED VIEW OF POWER SUPPLY

PCB101	YWV3203EZK11
PCB102	YWV3203EZK12
D105	LN23L
F101	YWTS125MA
PT101	YWHPE354E41
E101	YWKP56LT2F22
	YWKP4192F22
	YWGTBS2F
E102	YWONOB3200A
E103	TWSN5053
SW101	TW1P31AC2020
CN101-JF	RM15TRD-10SB
M150	YVZCA66KR01
M151	YVZCA66KR02
M152	YWVPS101NUM1
	YWV550PUM51
M153	YWV3303LM04
M154	YWV470-HR51
M155	YWV470-WB51
M156	YVZCA66LB01
M157	YWV550-AM51
M158	YWV470-AM52
M159	YWSR4N-4
M160	YWE6400FR99
M161	YWVPS01NUR1
	YWVPS01EUR1
M162	YWVSP01ELB1
M164	YWV470-UB52
M165	YWV470-UB51
M168	YWV460EKR51
M169	YW-B-UR01

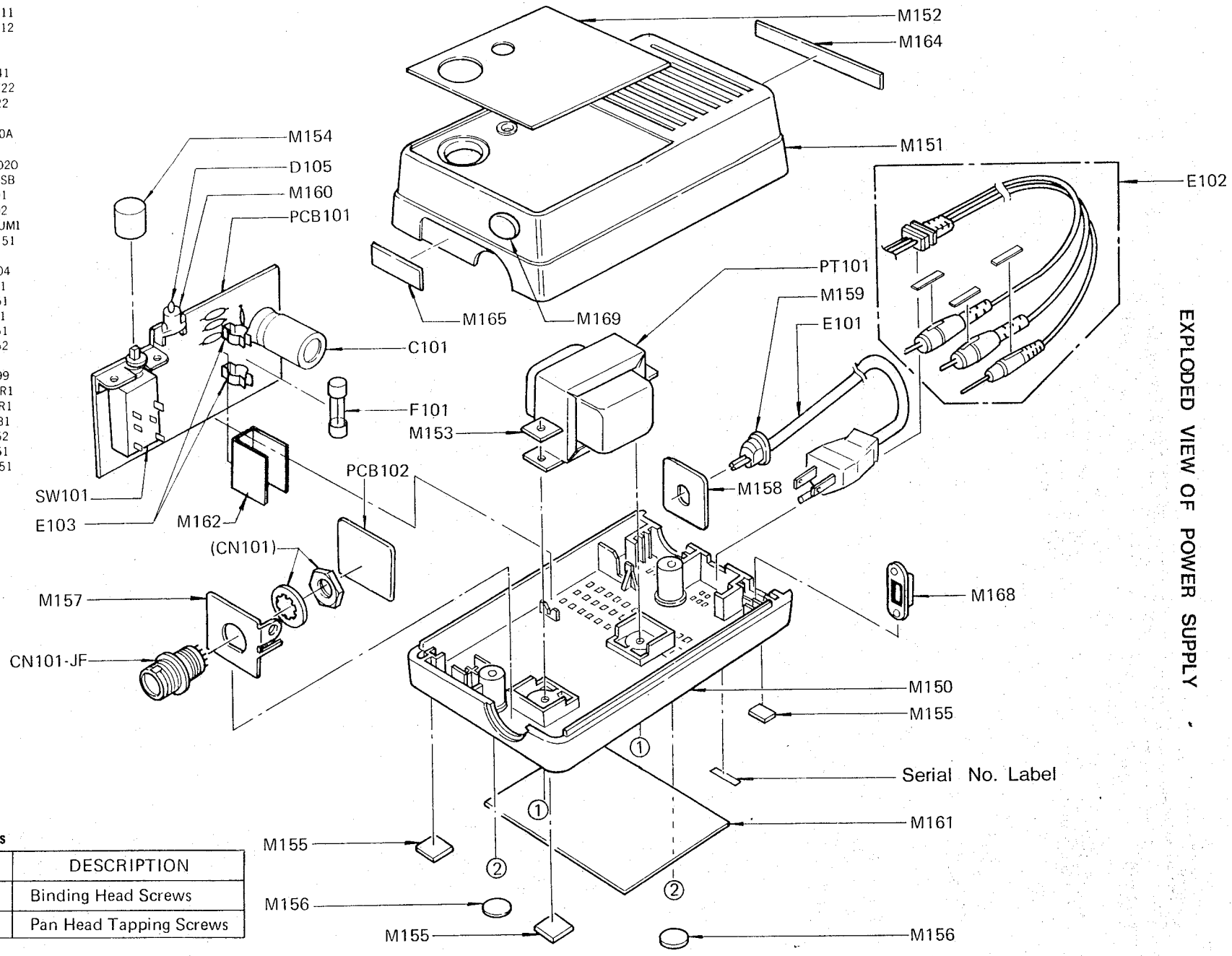

○ **Numbers show Screws**

No.	Screws	DESCRIPTION
①	XSB4+8FXS	Binding Head Screws
②	XTN4+35CFXK	Pan Head Tapping Screws